WILDWOOD

December 19, 2016

The Honorable City Council
City of Wildwood, Missouri
16860 Main Street
Wildwood, Missouri 63040

Re:	**P.Z. 23-15**
Petitioner:	Pond Athletic Association
Request:	A response to a communication dated November 22, 2016 from Dionna Helfers, Vice-President of the Pond Athletic Association, regarding a request to allow for certain allowances/relief to existing requirements relating to required screening for sponsorship banners and lighting of athletic fields.
Zoning:	Amended Conditional Use Permit (CUP) in the NU Non-Urban Residence District and FPNU Floodplain Non-Urban Residence District
Location:	West side of Pond Road, north of Hohmann Road/Street Addresses: 1725 and 1613 Pond Road
Tract Size:	19 acres
Locator Numbers:	22W330042 and 22W330051
Ward:	One

Council Members:

INTRODUCTION AND ACTION >>> The Planning and Zoning Commission is in receipt of a correspondence from the Vice-President of the Pond Athletic Association (PAA) that is seeking a review of two (2) items relating to its current Conditional Use Permit (CUP), which governs this athletic facility in the City. The correspondence is dated November 22, 2016, but previous conversations were held between the Association and the City, prior to the aforementioned submittal. The nature of the requests relate to the type of screening materials that can be used on the outfield fences to shield the sponsorship banners that are now allowed upon them and a consideration relating to light trespass, in association with the installation of new lights on two (2) of the existing fields. The Planning and Zoning Commission has considered these requests and reviewed relevant files and other background materials in preparation of this report and completed its recommendation in this regard. Accordingly, acting at the Planning and Zoning Commission meeting of December 19, 2016, and by a vote of 7 to 0 (with one (1) abstention), it hereby forwards its report, with action, to the City Council for its review and consideration.

BACKGROUND >>> For the purposes of review, the Pond Athletic Association (PAA) received its first Conditional Use Permit (CUP) from St. Louis County in 1964, which represents its long history at

this location on Pond Road. This permit was granted to an area of 11.73 acres, which accommodated the initial playing fields, parking, and ancillary areas for support of the property's use. In 1991, the Association added acreage to the north and west of the existing fields, which required another Conditional Use Permit (CUP) to be granted by St. Louis County for this new area of the facility. In total, under the conditions of the two (2) permits, the facility was authorized for seven (7) fields and additional parking areas, and support locations. The overall size of the facility was approximately nineteen (19) acres at that time.

Interestingly, the original permit granted in 1964, also contained language relating to lighting, which was eventually interpreted by St. Louis County to allow the ball fields to be lit, which led to a lawsuit filed by surrounding property owners. The St. Louis County Circuit Court eventually ruled in favor of St. Louis County's interpretation of the permit relative to athletic field lighting, and lights were installed at the facility in 1994. Shortly, thereafter, the City of Wildwood incorporated and accepted the two (2) permits for this facility and its operation, now after almost thirty (30) years of operation in the community.

In 2006, the Association sought to address a list of improvements at the facility, including the potential of lighting additional ball fields for the future. In discussions between the City and the Association, it was agreed the two (2) existing permits would be combined and the facility would be governed by a single set of conditions. Included in this update, an additional building was authorized, more parking, and the lighting of the remaining ball fields located on the site. Along with these changes, the City also upgraded some of the original 1964 conditions to reflect the changes that had occurred at the facility and in the surrounding area. This amended, and combined, permit was granted by the Planning and Zoning Commission in 2006 and was accepted by the City Council thereafter. It is important to note that all of the requested and approved changes that were discussed at this time have not been constructed or installed at the facility at this time, such as the additional athletic field lighting. The facility, in 2014, celebrated its 50th Anniversary at its Pond Road location.

One (1) of the conditions of the amended permit was a requirement relating to the number of buildings and structures that could be placed on the site and their overall square footage (no greater than 5,000 square feet). Besides the permanent concession stands and storage building, another structure was authorized in the amended permit, which was a temporary restroom building in proximity to the training league fields where the need was determined greatest. Therefore, no other temporary structures could be allowed on this site, without the permit being amended.

CURRENT REQUEST >>> The Vice-President of the Pond Athletic Association has submitted a proposal that seeks to amend the current governing conditions of the Conditional Use Permit (CUP) to allow slatting and/or windscreen type materials to be used on fields displaying sponsorship banners, along with certain allowances for light trespass in association with the placement of new standards at two (2) of the existing athletic fields along the respective property boundaries. These requests are refinements to the allowances that have been granted in the governing permit for this facility. In support of these requests, the petitioner has provided information relating to the change

in screening materials for the outfield fences, where the permitted banners would be placed, as well as information relating to an analysis of trespass by providing a blanket scan of vertical light spillage from the two (2) specific fields measured at a distance of five (5) feet above existing grade, along with a catalog cut-sheet of the proposed screen for the luminaires and photographs. These items were requested at a meeting between the athletic association, Musco Lighting, the consultant for Pond Athletic Association, and City staff. This information is provided as part of the background information to this report.

In seeking these changes to the governing permit, the petitioner notes the slatting option offers a more durable solution than the required wind screening material, which often must be replaced every two (2) to four (4) years, and requires much more maintenance. The Vice-President of the Association notes the screening effect would be comparable and the membership is planning to have the backside of the sponsorship banners printed evergreen in color to maximize the consistency between these two (2) different materials. The slatting is also permanent on the fence, whereas the windscreen must be removed after each season and reinstalled thereafter.

The lighting trespass relates to the review comments of the City's lighting consultant and identifies glare control and impacts of illumination levels along every property line of the subject site as issues. The impact along the west property is greater than the other boundary areas of the site. The petitioner is requesting the City accept the light trespass, as offered as an option in the City's consultant's notes on this matter.

ANALYSIS >>> The Planning and Zoning Commission has considered the two (2) components of the petitioner's request, i.e. slatting in lieu of windscreen for the sponsorship banners and lighting components associated with the planned illumination of two (2) of the remaining fields at the facility, and developed recommendations in regards to both. The Planning and Zoning Commission reviewed the files relating to the hearings on both of these matters, one (1) held in 2006 on the lighting and the other in 2016 on the banners, as part of its consideration of these matters. The outcome of this review and the associated recommendations in regards to both components are provided below:

Slatting Request – The Planning and Zoning Commission has considered the materials and background information regarding the change in the screening materials for those fence areas, where sponsorship banners are planned, and believes the application of either will achieve the intended outcome of protecting the surrounding properties and roadways from unwanted views of advertising in a residential area. Based upon the characteristics of the slatting, the Planning and Zoning Commission agrees with the petitioner regarding the following items:

a. The slatting will provide almost one hundred (100) percent screening of the planned banners – 95%.
b. The slatting can be retained year round, whereas the wind screen material is removed at the end of each season (it is important to note the governing permit still requires the removal of the banners at season end, regardless of permanent use of screening or not).
c. The slatting will last longer and provide an improved aesthetic over a greater period of time.

d. The Planning and Zoning Commission still has the authority under the governing permit to select the proposed color of the slatting to complement the current environment of the facility and surrounding neighborhood, i.e. dark green or black.

Given these characteristics, the Planning and Zoning Commission does not object to providing the Association the option of slatting or wind screen material for use on the athletic fields, where sponsorship banners are planned. Again, under the Conditional Use Permit (CUP), the Planning and Zoning Commission will have the opportunity to review all components of the screening material on the outfield fences, before installation.

Lighting Request – The issue of lighting, and the trespass issue associated with it, creates a more worrisome precedence for the Planning and Zoning Commission. The Outdoor Lighting Requirements of the City's Zoning Ordinance provides the Director of Planning latitude in making determinations of this nature, if two (2) specific conditions are met in terms of equivalency and intent. Additionally, the underlying regulations of the Conditional Use Permit (CUP) process do not, like in other instances for setback areas, height, signage, etc., stipulate the underlying regulations, in this case, the Outdoor Lighting Requirements, cannot be less restrictive than the zoning district standards where the use is located. However, in this case, the Department of Planning is requesting the input of the Planning and Zoning Commission in making this determination.

The Planning and Zoning Commission would note the issue of adding lighting at this location was first discussed in 2006, when the original permits from St. Louis County were amended and combined by the City of Wildwood. It was at that time, the Planning and Zoning Commission, when granting the combined permit, agreed to allow the two (2) westernmost fields to be lighted at this location. A condition of this lighting was included in the permit and reads as follows: "*the lighting of five (5) of the existing athletic fields shall be authorized within the boundaries of this Amended Conditional Use Permit Area, with all existing and proposed light standards, fixtures, and luminaries complying with Section 1003.160 Lighting Code of the City of Wildwood's Zoning Ordinance. No new light standards, fixtures, and luminaries shall be installed, until the existing facilities (standards, fixtures, and luminaries) are brought into compliance with the current Lighting Code of the City of Wildwood.*" Section 1003.160 Lighting Code was codified into Chapter 415.450 Outdoor Lighting Requirements. Therefore, compliance to these requirements is mandatory for these new lights and standards.

The use of lights for athletic events at this facility has been controversial, since the first time some of the fields were illuminated before the incorporation of the City. The addition of these two (2) fields in terms of lighting was equally controversial, but allowed, given the anticipated improvements in lighting technology to address nuisance glare, loss of night sky, and trespass. These technological improvements and the existence of new regulations of the City, i.e. City Outdoor Lighting Requirements, were believed to be sufficient to avoid those pitfalls associated with the past use of athletic field lighting at this facility. New technologies now include LED light sources and improved programming techniques for design and aiming.

In a meeting that was held between the athletic association, its contractor, Musco Lighting, and the Department of Planning, after the December 5, 2016 Planning and Zoning Commission session, it was noted to the City the selected lighting source was not LED type, but rather a high intensity discharge lamp (HID), like metal halide. The chosen lighting source has been utilized for years in lighting athletic fields and facilities, while LED types are becoming more prevalent. This type of lighting source has a role in the amount of trespass an installation of lighting will have on an area, given aiming LED light sources appears to be more accurate. To address this choice of lighting source, the association's contractor provided additional information on the types of reflectors that are planned for use at this location and this selection was determined to be appropriate by the City's lighting consultant for the purposes of directing light and managing glare. With this information, the remaining issue of trespass, at certain boundary lines, remained as the only matter of non-compliance to the City's Outdoor Lighting Requirements.

The extent of light trespass places the Commission (and the Department) in a difficult decision for this facility. This difficulty relates to the services this facility provides to all of Wildwood, and many of its residents. This facility offers athletic fields and programming that is not available from the City, so meets a major need in Wildwood. Along with this circumstance, the City supports the facility's efforts to provide quality and safe fields for play. However, the Commission is aware the original approval of the lighting of these fields was premised on compliance to City requirements and not adding to the illumination issues identified by nearby residents at this location over the years. Therefore, from the perspective of the Commission, every effort must be considered to address light trespass.

Acknowledging the shielding component of the proposed lighting design addresses the glare component by the selection of the chosen reflector type, the Commission focused on the trespass issue, which included new information about the extent of impact on surrounding properties. This new information was a blanket grid of lighting values beyond the property lines of the athletic association (maximum vertical foot candles, under the worse case scenario). This blanket grid indicates that, for the association to meet the City's standards of City's Outdoor Lighting Requirements, it would have to be purchase or lease an additional area of up to seven hundred (700) feet of the adjoining property to the west of the site and some locations of the sites to the north, south, and east of the subject lot. This standard is 0.1 foot-candles. Discussion followed on relocating the proposed pole locations from the area of the subject site that abuts the property to the west, but was determined it would affect field lighting, while then agreeing precise aiming of the lighting fixtures must be undertaken. The conclusion of this meeting was that, for these two (2) fields to meet City requirements in this regard, some level of trespass would have to be accommodated.

To address this matter, the Commission would have to accept up to a twenty-four (24) foot-candle level for this facility along the western boundary of the subject site and up to two (2) foot candles or more on the north and south boundaries. Based upon the blanket grid, light trespass is compliant to the City's Outdoor Lighting Requirements at a line approximately seven hundred (700) feet onto the neighboring property to the west (the worst-case scenario). The Commission, may be agreeable to allowing a level of trespass onto this abutting, vacant lot, but the City would have to

be prepared to manage the type of activity that would be allowed in this same area of the abutting property in the future, if its use is ever changed from agricultural (current) to residential or institutional. Accordingly, this approach does impact the adjoining properties and, for the Commission, such remains problematic. The Commission would note the abutting property, under this worst-case scenario, is used for agricultural purposes, has a portion of it designated as floodplain, and includes an existing and extensive tree buffer on the common boundary line, which would mitigate, in part, some of the spillage impacts. However, light trespass also exists to the north, south, and east, where existing single family dwellings are located.

It is important to conclude with the acknowledgement regarding the City's lighting consultant's participation in this review. The City's lighting consultant continues to state that athletic field lighting is difficult, in planning and design, to ensure all measures of trespass and glare are addressed. However, the lighting consultant noted the aiming summary would assist in this regard, which has been provided by the athletic association. The consultant still maintains this level of trespass cannot be eliminated at this site, but reduced by the shielding, precise aiming angles of the light fixtures, and regular maintenance of the lighting fixtures, bulbs, and other improvements.

CONCLUSION AND PERMIT WORDING >>> The Planning and Zoning Commission hereby grants certain changes to the current amended permit to allow for the use of slatting, along with wind screen materials, for the purposes of sponsorship banner placements on the outfield fences of this facility. However, the Planning and Zoning Commission remains concerned about the extent of light trespass on adjoining properties, but remains committed to finding a solution to this matter. To this end, the Planning and Zoning Commission will accommodate a greater degree of light trespass than the Outdoor Lighting Requirements would allow, but not along the north, south, and east boundary lines, where existing dwellings are situated. The rationales for this support and concern are referenced above in the Analysis Section of this letter. Accordingly, the Planning and Zoning Commission hereby amends the current permit to read as follows:

1. PERMITTED USES

The uses authorized by this Amended Conditional Use Permit shall be a total of seven (7) ball fields, two (2) permanent concessions stands, with storage and restrooms, bleachers and dugouts, a meeting room, and associated parking. No temporary structures or buildings shall be allowed within the boundary of this Amended Conditional Use Permit area, except a single portable restroom structure that currently is located within the facility. This facility may be located within the boundaries of this Amended Conditional Use Permit for no more than three (3) years after its effective date.

a. The following recreational uses shall be permitted on the property covered by this permit: softball, baseball, soccer, football, and similar type games.

b. The lighting of five (5) of the existing athletic fields shall be authorized within the boundaries of this Amended Conditional Use Permit area, with all existing and proposed light standards, fixtures, and luminaries complying with ***Chapter 415.450 Outdoor***

Lighting Requirements ~~Section 1003.160 Lighting Code~~ of the City of Wildwood's Zoning Ordinance. No new light standards, fixtures, and luminaries shall be installed, until the existing facilities (standards, fixtures, and luminaries) are brought into compliance with the current ***Outdoor Lighting Requirements*** ~~Lighting Code~~ of the City of Wildwood.

i. **Illumination levels for lighting at the westernmost boundary of the Amended Conditional Use Permit boundary shall be as approved by the Planning and Zoning Commission on the required Lighting Plan, but shall be no greater than 0.1 foot candles along the north, south, and east boundary lines of the Amended Conditional Use Permit (CUP).**

c. The total number of allowed light standards within the boundaries of this Amended Conditional Use Permit area shall not exceed thirty-two (32) structures.

2. DEVELOPMENT AREAS AND BUILDING REQUIREMENTS

a. The total size of this Amended Conditional Use Permit area shall not be less than nineteen (19) acres in overall area.

b. The total size of all buildings and structures located within the boundaries of this Amended Conditional Use Permit area shall not exceed 5,000 square feet in area.

c. No building or structure, except the authorized light standards, shall exceed one (1) story in overall height.

d. Any new building shall be subject to consideration by the Architectural Review Board of the City of Wildwood in accordance with the standards contained within Section 1003.167 of the City of Wildwood's Zoning Ordinance. Said review board must consider and act on any new building, before the issuance of a Zoning Authorization for building permit(s).

e. The Association shall provide a dust-suppression system upon/within the athletic fields to address nuisance problems associated with their grading and preparation for use.

3. SITE DEVELOPMENT PLAN SUBMITTAL REQUIREMENTS

Review and action on the Site Development Plan for this project by the Planning and Zoning Commission shall be accomplished in a manner, which will provide for the minimum disturbance with regards to all improvements on the property, consistent with technology and practically feasible subject to compliance by all applicable codes and safety standards. Within thirty-six (36) months of the Amended Conditional Use Permit being granted by the City of Wildwood, and prior to any site disturbance, the developer shall submit to the Planning and Zoning Commission for their review and approval a Site Development Plan. Where due cause is shown by the developer, this time interval may be extended once by the Planning and Zoning Commission in accord with requirements of Section 1003.181 of the City of Wildwood Zoning Ordinance. Said Site Development

Plan shall include, but not be limited to, the following information, unless as otherwise provided in this permit:

a. Outboundary plat and legal description of the property.
b. The location and size of all parking areas, pavement widths, and right-of-way dedications of all internal roadway improvements and drives.
c. A general plan indicating all structure and parking setback lines along the perimeter of the subject tract of land.
d. Location of all roadways adjacent to the property, including required roadway right-of-way dedication and pavement widening with existing and proposed improvements, and general location, size, right-of-way, and pavement width of all interior drives.
e. The location and size of all freestanding signs, lighting, fences, sidewalks, and other above ground structures, except retaining walls less than two (2) feet in height per section.
f. Existing and proposed contours at vertical intervals of not more than two (2) feet.
g. Parking calculations for the proposed use.
h. A Landscape Plan including the location, size, and general type of plant materials to be used in accord with the City of Wildwood's Chapter 410 and accompanying Tree Manual.
i. An inventory indicating the percent of tree canopy to be retained on the site.
j. Location of all existing and proposed easements.
k. All other information not mentioned above, but required on a preliminary plat in accord with Section 1005.060 of the City of Wildwood's Subdivision and Development Regulations.

4. SITE DEVELOPMENT PLAN DESIGN CRITERIA

The above Site Development Plan shall adhere to the following specific design criteria:
Building, Parking, Loading and Internal Drives Setbacks

a. No ball fields, parking areas, structure or internal drive, except points of ingress and egress, shall be located within the following setbacks:

(1) Fifty (50) feet from the right-of-way of Pond Road.
(2) Ten (10) feet from the west property line of this development.
(3) Fifty (50) feet from the east property line of this development.
(4) A minimum one hundred (100) foot distance shall be maintained for the authorized concession stand from the west property line of this Amended Conditional Use Permit Area, with its exact location approved by the Planning and Zoning Commission on the Site Development Plan.
(5) No new structure shall be placed in a designated floodway or 100-year floodplain zone on this site, nor block any required parking space or drive aisle area.

Minimum Requirements

b. Minimum parking requirements shall be as set forth in Section 1003.165 of the City of Wildwood Zoning Ordinance, except that all parking areas shall be paved and there shall be adequate off-street parking facilities for at least eighty (80) automobiles.

Access

c. A maximum of two (2) access points shall be authorized to serve this facility. These access points exist and no other curb cuts to Pond Road shall be permitted to serve this conditional use.

Road Improvements and Sidewalks

d. Dedicate the necessary right-of-way, easements and Temporary Slope Construction License along Pond Road to accommodate the proposed realignment of Pond Road, as directed by the Department of Public Works.

e. Provide a sidewalk adjacent to Pond Road, or provide the required cash escrow, as directed by the Department of Public Works.

Lighting Requirements

f. The location of these lighting standards or fixtures shall be as approved on the Site Development Plan. No on-site illumination source shall exceed sixteen (16) feet in height, or be so situated that light is cast directly on adjoining properties, except the athletic field light standards, which may be no greater than sixty (60) feet in height. Illumination levels for all lighting shall comply with the provisions of the City of Wildwood's Zoning Code Section 1003.160 "Outdoor Lighting Requirements." A Lighting Study shall be submitted in conjunction with the Site Development Plan indicating compliance to these requirements. The Planning and Zoning Commission shall approve the location, design, and appearance of all light standards and fixtures as part of the Site Development Plan review process.

Signs

g. Signs for this Amended Conditional Use Permit shall be erected in accordance with Section 1003.168 Sign Regulations of the City of Wildwood's Zoning Ordinance for the NU Non-Urban Residence District.

h. Sign illumination and other lighting arrangements shall be so arranged as to not cast light directly from any source of illumination on any public right of way or on adjoining property and comply with Section 1003.160 Outdoor Lighting Requirements of the City of Wildwood's Zoning Ordinance.

Landscaping Requirements

i. Landscaping shall adhere to all requirements of the City of Wildwood's Chapter 410 and its accompanying Tree Manual, including the submittal of a Tree Preservation Plan in conjunction with the Site Development Plan. All new landscaping materials shall meet the following criteria: Deciduous Trees - two and one-half (2 ½) inch minimum caliper; Evergreen Trees - Six (6) feet minimum height; and Shrubs - twenty-four (24) inch minimum height.

j. The areas of existing vegetation within the Amended Conditional Use Permit boundaries identified as to be retained shall be marked on the site prior to the commencement of any disturbance in accord with the City of Wildwood's Chapter 410. These areas shall be indicated on the Site Development Plan submitted to the City of Wildwood for Planning and Zoning Commission review and approval. Existing mature tree canopy shall be preserved in accordance with the requirements of City of Wildwood's Chapter 410 Tree Preservation and Restoration Code.

k. All stormwater facilities shall be appropriately landscaped and comply with Chapter 410 of the City of Wildwood's Codified Ordinances and its accompanying Tree Manual. Wetlands plantings may be used at appropriate locations within the basins themselves as directed by the Department of Public Works.

l. A Registered Landscape Architect shall prepare and sign all Landscape Plans for this development.

m. Pine trees a minimum five (5) feet in height shall be planted along the eastern property line, where ball fields align with the abutting single family home to the east, if existing vegetation does not adequately provide buffering as determined by the Planning and Zoning Commission on the Site Development Plan.

n. A ten (10) foot undisturbed buffer shall be provided along the west property line.

Miscellaneous Requirements

o. No events or activities shall be conducted on the property in question after the time of 10:30 p.m.

p. Trash shall be deposited only in dumpsters, which shall be screened with a six (6) foot high sight-proof fence.

q. No public address or loudspeaker system shall be authorized by this Amended Conditional Use Permit.

r. A six (6) foot high wood sight-proof fence shall be provided along the entire east property line, where it abuts residentially developed property.

s. A six (6) foot high chain-link fence shall be required along the west property line, or along or within the western undisturbed buffer, as approved on the Site Development Plan.

t. Satisfactory sanitary facilities, including toilet facilities, as required by the St. Louis County Health Department, must be provided.

u. Refreshments sold in conjunction with the recreational use shall be limited to food and non-intoxicating beverages.

5. VERIFICATION PRIOR TO APPROVAL OF SITE DEVELOPMENT PLAN

Prior to the approval of the Site Development Plan the petitioner shall submit the following:

Stormwater

a. Submit to the Planning and Zoning Commission a preliminary engineering plan approved by the Department of Public Works showing that adequate handling of the stormwater drainage on the site is provided.

   (1) The developer is required to provide adequate stormwater systems in accordance with City of Wildwood standards.
   (2) All stormwater shall be discharged at an adequate natural discharge point.

Roadway Improvements and Curb Cuts

b. Provide verification of approval by the City of Wildwood Department of Public Works of areas of new dedication and roadway improvements.

Flood Plain Study

c. As a significant portion of this tract is located in Zone "A" of F.E.M.A.'s Flood Insurance Rate Map, an approved flood plain study will be required prior to approval of the Site Development Plan.

6. RECORDING

Prior to the issuance of any building permit or permit authorizing the use of the subject property, the approved Amended Conditional Use Permit, including conditions and any subsequent amendments thereto and the legal description of the tract shall be recorded with the St. Louis County Recorded of Deeds.

7. VERIFICATION PRIOR TO BUILDING PERMITS

Subsequent to approval of the Site Development Plan, and prior to the issuance of any building permit, the developer shall provide the following:
Landscape Bonds or Escrows

a. If the estimated cost of new landscaping indicated on the Site Development Plan as required by the Planning and Zoning Commission exceeds and estimated cost of one thousand ($1,000) dollars, as determined by a plant nursery, the petitioner shall furnish a two (2) year bond or escrow sufficient in amount to guarantee the installation of said landscaping.

Notification to the Department of Planning

b. Prior to the issuance of foundation or building permits, all approvals from the Department of Public Works must be received by the Department of Planning.

8. GENERAL DEVELOPMENT CONDITIONS

a. Adequate temporary off-street parking for construction employees shall be provided. Parking on non-surfaced areas should be prohibited in order to eliminate the condition whereby mud from construction and employee vehicles is tracked onto the pavement causing hazardous roadway and driving conditions.

b. A grading permit is required prior to any grading on the site. No change in watersheds shall be permitted.

c. Interim stormwater drainage control in the form of siltation control measures, are required.

d. Right-of-way dedication shall be completed prior to the issuance of a grading permit.

e. If cut and fill operations occur during a season not favorable for immediate establishment of a permanent ground cover, a fast germinating annual such as Rye or Sudan Grasses shall be utilized to retard erosion.

f. If any public roads are proposed within this development, they must be built above the 100-year flood elevation with proper freeboard, or protected from flood damage by an approved levee. Any roads and/or drives proposed below this elevation, not protected by an approved levee, are to be private and remain private forever.

g. If roadways in this petition are to be private roadways, these roadways shall remain private forever. Maintenance of private roadways shall be the responsibility of the property owner(s) or trustees forever.

h. The Zoning Enforcement Officer of the City of Wildwood, Missouri shall enforce the conditions of this ordinance in accord with the Site Development Plans approved by the Planning and Zoning Commission.

i. In addition to the conditions herein imposed, this permit shall be subject to all applicable provisions of the City of Wildwood Zoning Ordinance. The Zoning Enforcement Officer of City of Wildwood, Missouri, shall be charged with the duty of enforcing the conditions of this permit.

9. **SPONSORSHIP BANNERS**

a. A total of five (5) athletic fields may display sponsorship banners at this facility. These five (5) fields are identified on the approved Amended Site Development Plan, dated March 5, 2010, and noted as Fields One (1) through Five (5) upon it.

b. Any athletic field that displays sponsorship banners must also have a wind screen or ***vinyl slatting*** installed on the opposite side of the same fence to offset their color and potential viewing from locations other than at the facility. The inclusion of the wind screen or ***vinyl slatting*** materials must be indicated on the 2nd Amended Site Development Plan, be black or dark green in color, and reviewed and acted upon by the Planning and Zoning Commission before installation.

c. No sponsorship banner shall be placed upon a fence at this facility, so as it is directly visible from an adjoining roadway or property.

d. Sponsorship banners shall only be printed on one (1) side, that side facing into the playing fields themselves, and cannot exceed the height of the fence where it is attached.

e. No sponsorship banner shall exceed thirty (30) square feet in area. Any banner shall have a white background for its color and cannot be lighted, except from existing sources used for play or safety.

f. None of the athletic fields authorized for the placement of sponsorship banners shall have more than six (6) of these displays installed upon the fences. All sponsorship banners must be placed in conjunction with an active use athletic field.

g. Any sponsorship banner that is damaged, faded through use, or in disrepair shall be removed as soon as possible. All banners shall be regularly maintained in good condition.

h. All sponsorship banners herein authorized at this facility shall be removed from the allowable five (5) athletic fields at the end of each season, generally through November 1st to March 31st.

Note: Changes are indicated by bolded and italicized text, while deletions are shown by single, strike-through line.

Respectfully submitted,
CITY OF WILDWOOD PLANNING AND ZONING COMMISSION

R. Jon Bopp, Chair

ATTEST:

Joe Vujnich, Director
Department of Planning

Cc: The Honorable James R. Bowlin, Mayor
Council Members De Hart and McGowen, Ward One
Ryan S. Thomas, P.E., City Administrator
John A. Young, City Attorney
Kathy Arnett, Assistant Director of Planning and Parks
Travis Newberry, Planner

Travis Newberry

From: Dionna Helfers <dionna.helfers@live.com>
Sent: Tuesday, November 22, 2016 3:34 PM
To: Travis Newberry
Cc: Keith Ellis; Bob Kraemer
Subject: Request to revise Pond Athletic conditional use permit
Attachments: lit_PrivaMax.pdf

Travis,

On behalf of Pond Athletic Association, I would like to request that our conditional use permit be revised to allow for the use of windscreen or fence slats to serve as privacy screening on our outfield fences that will display sponsorship banners.

After researching, we found that fence slats (green) are comparable in price and functionality to windscreen but with a much longer life. Windscreen requires replacement every 2-4 years with a very limited warranty, while the fence slats carry a 25 year warranty and will be a permanent part of the fence. Using fence slats will eliminate the labor expense we incur to put up and take down the windscreen each season.

It is expected that the fence slats will provide the same level of privacy screening that the windscreen provides, to provide additional discretion of the banners we plan to the have the back side of the banners printed in evergreen.

Attached is the specification for the fence slats for your consideration. https://www.merchantsmetals.com/pre-slatted/#section-2

Thanks,
Dionna

MMI01PM
version:12/02

Pre-inserted vinyl slats woven in chain link mesh

PRIVA-MAX™

95% Privacy Screening

Features:

- *Time Saving Installation*
- *95% Privacy*
- *Variety of Colors*
- *No Staples or Clips*
- *Durability*
- *Practically Maintenance Free*

MERCHANTS METALS

Merchants Metals is one of the world's largest manufacturers of chain link fabric with vinyl pre-inserted slats. We call this product Priva-Max™

As an American owned and operated company Merchants Metals' products are distributed through our 8 manufacturing facilities and 47 services centers nationwide.

All Merchants Metals' products are available through our exclusive Authorized Dealer network and other fence contracting professionals. When you deal with a Merchants Metals Authorized Dealer, you can be assured you are dealing with a qualified fence professional, using only quality products backed by manufacturer's warranties.

Priva-Max™ meets or exceeds

PRIVA-MAX™ is a combination of 3 1/2" x 5" chain link mesh that is made of galvanized before weaving (GBW), 9 gage wire and specially designed PVC extruded fence slats. Each strand of wire contains a zinc coating weight of 1.2 oz per sq. ft minimum and a 1290 lb break strength minimum. PVC slats are extruded in a shape that, when inserted into the fabric, creates a 95% privacy screen.

COMPARE	PRIVA-MAX™	STANDARD

PRIVACY
Priva-Max™ fencing gives you 95% privacy. Standard fence with prewoven slats gives you only 75% privacy or less. That's 20% more privacy with Priva-Max™.

HEIGHTS & LENGTHS
Priva-Max™ is available in 6' and 8' heights and 25' lengths. Rolls of this fabric may be woven together to obtain longer lengths. Special heights are available upon request.

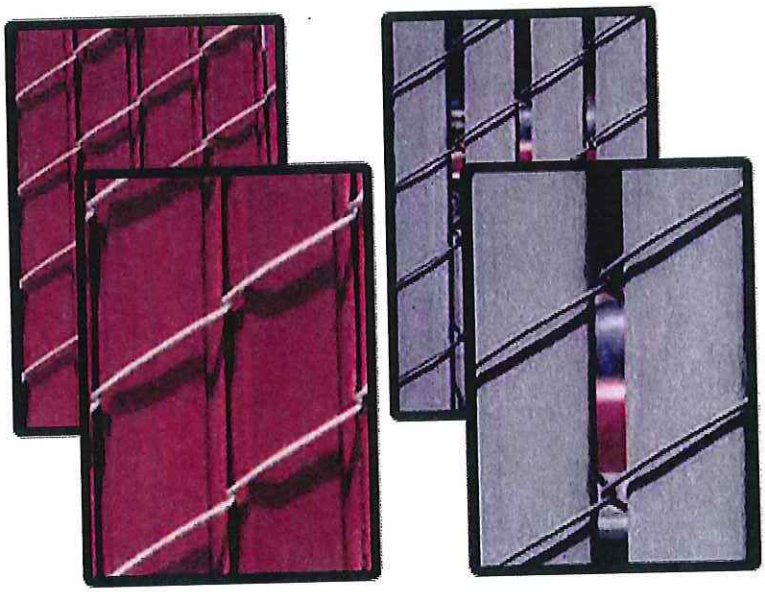

WIRE
The standard wire used in Priva-Max™ is galvanized before weaving (GBW). Vinyl coated or aluminized wire is also available. The chain link fabric is woven with wire coated in conformance with ASTM A817.

DURABILITY
PVC fence products are resistant to severe weather conditions, salt water, sand, road dirt, most acids, alcohol, alkaline, ammonia, petroleum distillates, and common environmental pollutants.

VIRTUALLY MAINTENANCE FREE
The only maintenance is pressure cleaning of the surface contaminants with plain water.

MERCHANTS METALS

The First Name In Fence

TIME SAVING INSTALLATION

Because Priva-Max™ slats are factory installed during the weaving process, you will save time and money.

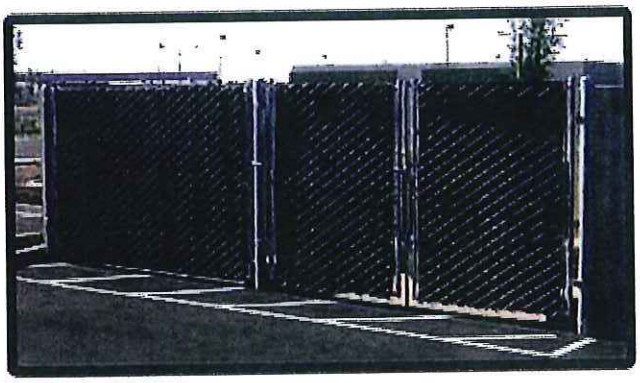

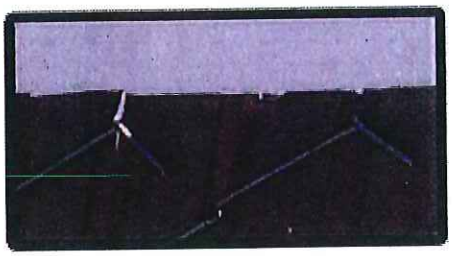

NO STAPLES OR CLIPS

Priva-Max™ slats are inserted during the weaving process and a standard knuckle is formed at the top and bottom of the fabric that locks the slat in place. No staples or clips are required.

COLORS

Priva-Max™ slats are available in brown, redwood, green, white, gray or beige. Custom colors are available upon request and minimum orders are required.

LONG LASTING COLOR

Priva-Max™ slats are extruded from High Density Polyethylene (HDPE), color pigments and ultra violet (UV) inhibitors, specifically designed to retard the harmful effects of the sun and lengthen the life of the product.

HDPE TECHNICAL PROPERTIES

PROPERTY	VALUE
Melt Index	(0.6) A low melt index indicates improved stress and crack resistance.
Density	(0.957) Polyethylene density may range from 0.914 to 0.960. A higher density yields maximum stiffness without becoming brittle.
Minimum Temp.	(-76°F) Polyethylene stays flexible even at this temperature extreme.
Maximum Temp.	(250°F) Polyethylene does not distort until reaching this temperature.
Tensile Strength	(3,700 psi) Material will not suffer distortion at lesser

PRIVA - MAX

Practical Post Spacing Suggestions - Calculated from CLFMI Line Post Spacing Publication*

10 ft maximum spacing in accordance with ASTM F567

Post Type	ASTM F1043 Group I-A (Sch 40 Pipe)				ASTM F1043 Group I-C (LG-40)			
Fence Height	6 ft High		8 ft High		6 ft High		8 ft High	
Wind Speed	Post	Spacing	Post	Spacing	Post	Spacing	Post	Spacing
70 mph	Size, o.d.	Max.	Size, o.d.	Max.	Size, o.d.	Max.	Size, o.d.	Max.
Exposure A[1]	2.375"	10 ft	2.875"	10 ft	2.375"	10 ft	2.875"	10 ft
Exposure B[2]	2.875"	10 ft	2.875"	7 ft	2.375"	10 ft	2.875"	10 ft
Exposure C[3]	2.875"	8 ft	4.000"	10 ft	2.875"	10 ft	2.875"	6 ft
Exposure D[4]	2.875"	7 ft	4.000"	9 ft	2.875"	9 ft	4.000"	10 ft
80 mph	6 ft High		8 ft High		6 ft High		8 ft High	
Exposure A[1]	2.375"	9 ft	2.875"	10 ft	2.375"	10 ft	2.875"	10 ft
Exposure B[2]	2.875"	10 ft	2.875"	5 ft	2.375"	7 ft	2.875"	7 ft
Exposure C[3]	4.000"	10 ft	4.000"	8 ft	2.875"	9 ft	4.000"	10 ft
Exposure D[4]	4.000"	10 ft	4.000"	6 ft	2.875"	7 ft	4.000"	8 ft
90 mph	6 ft High		8 ft High		6 ft High		8 ft High	
Exposure A[1]	2.875"	10 ft	2.875"	8 ft	2.375"	10 ft	2.875"	10 ft
Exposure B[2]	2.875"	8 ft	4.000"	10 ft	2.875"	10 ft	2.875"	6 ft
Exposure C[3]	4.000"	10 ft	4.000"	6 ft	2.875"	7 ft	4.000"	8 ft
Exposure D[4]	4.000"	9 ft	4.000"	5 ft	2.875"	5 ft	4.000"	6 ft
100 mph	6 ft High		8 ft High		6 ft High		8 ft High	
Exposure A[1]	2.875"	10 ft	2.875"	6 ft	2.375"	9 ft	2.875"	9 ft
Exposure B[2]	2.875"	6 ft	4.000"	8 ft	2.875"	9 ft	4.000"	10 ft
Exposure C[3]	4.000"	9 ft	4.000"	5 ft	2.875"	5 ft	4.000"	6 ft
Exposure D[4]	4.000"	7 ft	------	------	4.000"	9 ft	4.000"	5 ft
110 mph	6 ft High		8 ft High		6 ft High		8 ft High	
Exposure A[1]	2.875"	10 ft	2.875"	5 ft	2.875"	10 ft	2.875"	7 ft
Exposure B[2]	2.875"	5 ft	4.000"	6 ft	2.875"	7 ft	4.000"	8 ft
Exposure C[3]	4.000"	7 ft	------	------	4.000"	9 ft	4.000"	5 ft
Exposure D[4]	4.000"	6 ft	------	------	4.000"	8 ft	------	------
120 mph	6 ft High		8 ft High		6 ft High		8 ft High	
Exposure A[1]	2.875"	8 ft	4.000"	10 ft	2.875"	10 ft	2.875"	6 ft
Exposure B[2]	4.000"	10 ft	4.000"	5 ft	2.875"	6 ft	4.000"	6 ft
Exposure C[3]	4.000"	6 ft	------	------	4.000"	8 ft	------	------
Exposure D[4]	4.000"	5 ft	------	------	4.000"	6 ft	------	------

Calculated max. post spacings rounded down to nearest foot. Calculated spacings less than 5 ft are not listed.
No ice exposure. 95% coverage by slats is assumed. Other combinations of post size and spacing are possible.

[1] Exposure A: Large city centers with at least 50% of the buildings having a height of 70 ft.

[2] Exposure B: Urban/suburban areas, wooded areas, or other terrain with numerous closely spaced obstructions having the size of a single family dwelling or larger.

[3] Exposure C: Open terrain with scattered obstructions having heights generally less than 30 ft. This category includes flat open country and grasslands.

[4] Exposure D: Flat, unobstructed areas exposed to wind flowing over open water for a distance of at least one mile.

**A Guide for the Selection of Line Post Spacing for Chain Link Fence*, CLFMI, Columbia, MD (1999)

For Complete Specifications and Drawings, Contact: Technical Sales (888) 260-1600 Fax (888) 261-3600

MerchantsMetals®

the first name in fence solutions

866.888.5611

www.merchantsmetals.com

An Oldcastle Company

Light·Structure Green™ – HID Luminaire

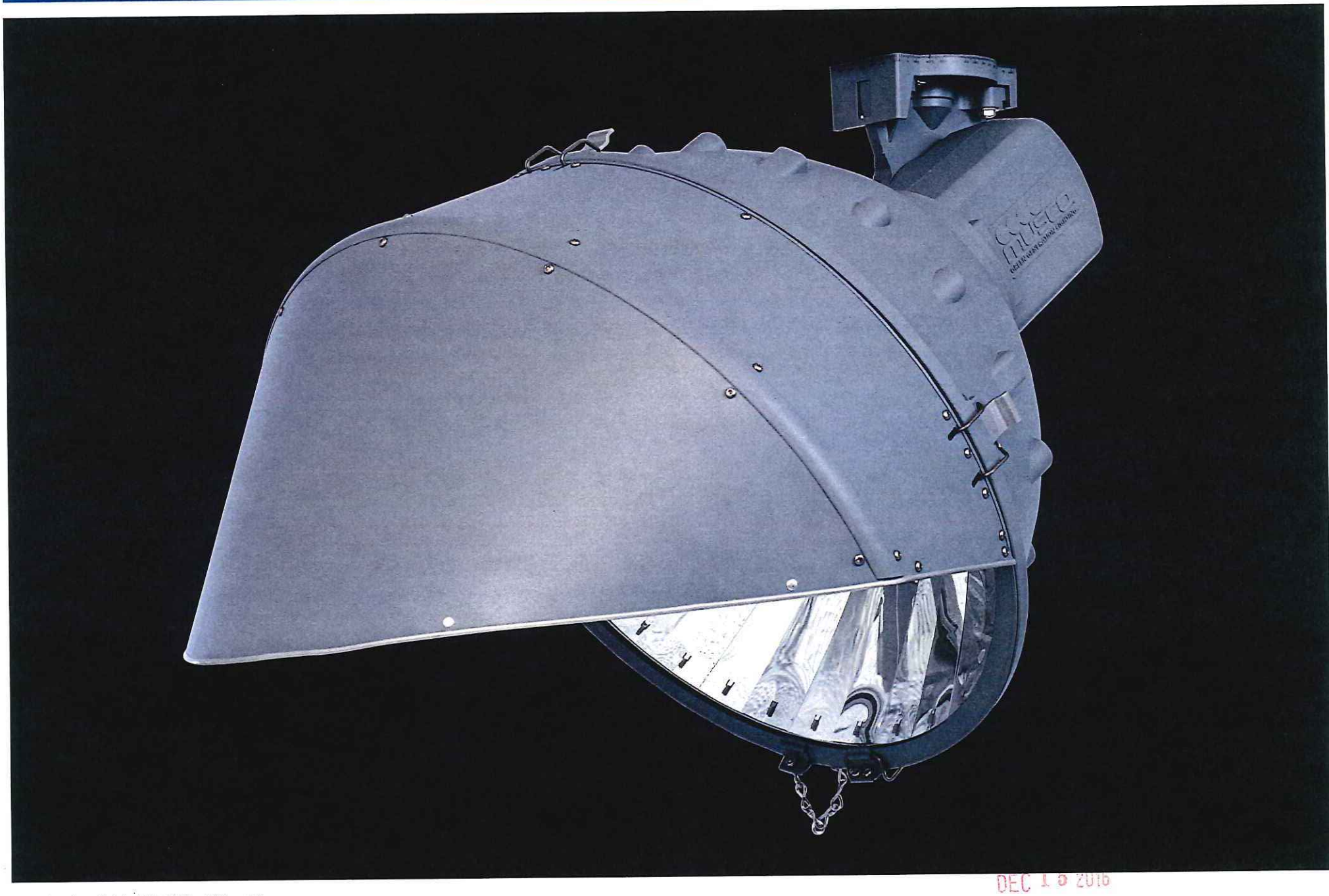

DEC 1 9 2016

©2014 Musco Sports Lighting, LLC · M-1783-enUS-2_page 7

Light·Structure GREEN™

Luminaire Assembly

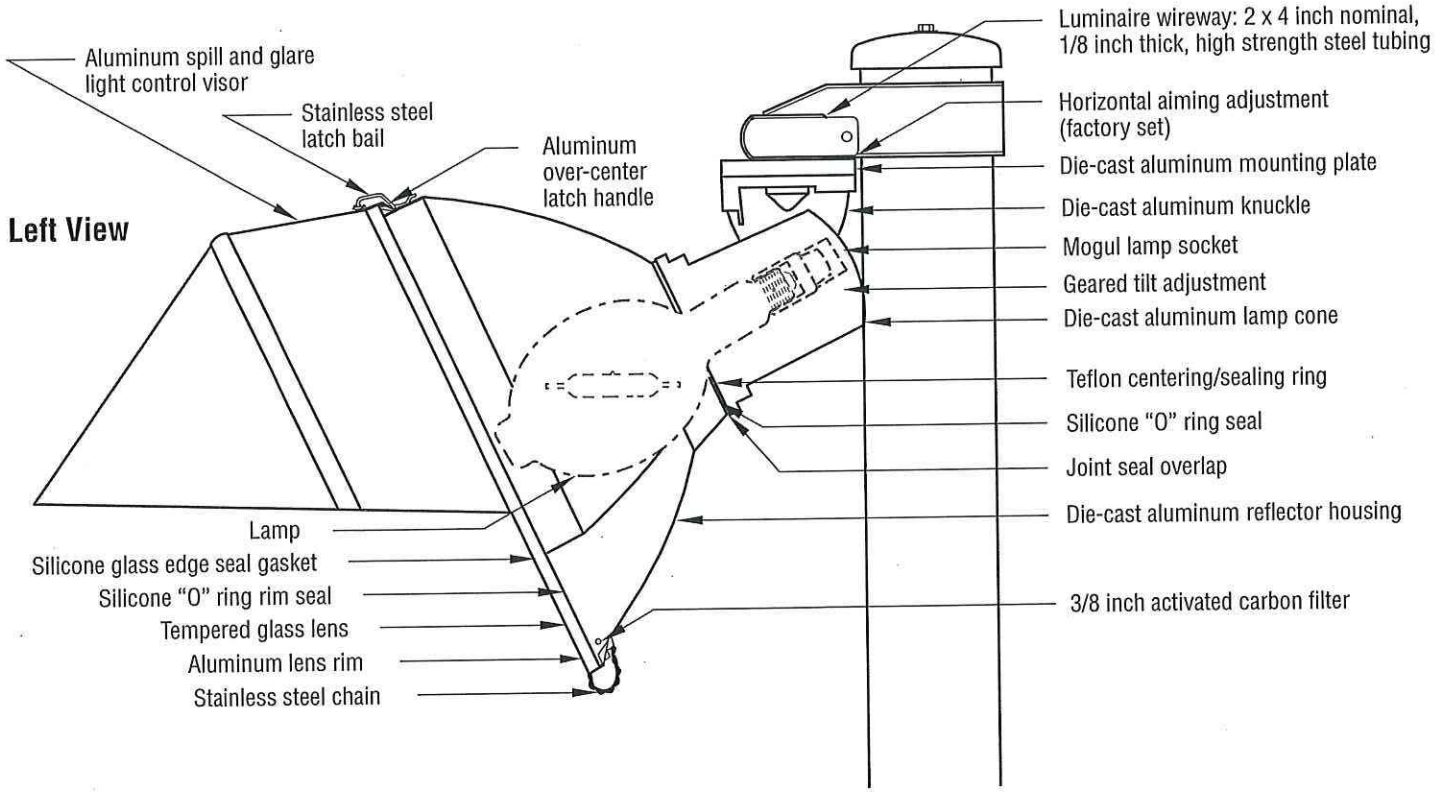

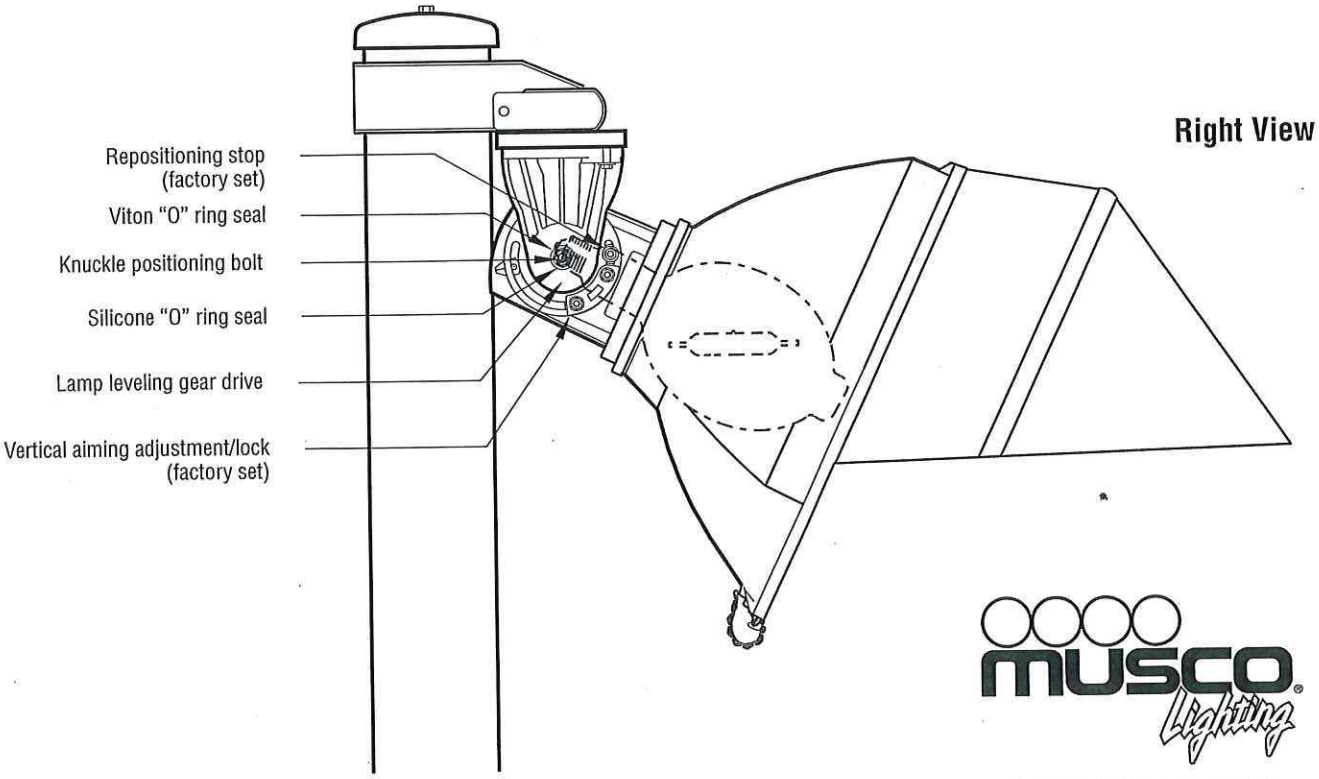

800/825-6030
www.musco.com
lighting@musco.com

Patents issued and pending.
© 2005, 2011 Musco Lighting · SLA2

WILDWOOD

16860 Main Street
Wildwood, MO 63040

CITY OF WILDWOOD
NOTICE OF
PUBLIC MEETING
before the Planning and Zoning Commission
Monday, December 5, 2016, at 6:30 p.m.

AS A RESIDENT OR PROPERTY OWNER NEAR THE SITE THAT IS IDENTIFIED ON THIS MAILER, THE CITY OF WILDWOOD WOULD LIKE TO ENSURE YOU ARE AWARE OF THIS REQUEST/PROPOSAL BECAUSE IT IS LOCATED WITHIN 3,000 FEET OF YOUR PROPERTY. YOUR COMMENTS ARE ENCOURAGED, ALONG WITH YOUR PARTICIPATION AT THE SCHEDULED HEARING OR MEETING. THIS ITEM IS SCHEDULED FOR DISCUSSION AND ITS OUTCOME MAY IMPACT YOUR HOME, NEIGHBORHOOD, OR AREA, SO PLEASE CAREFULLY READ THE DESCRIPTION AND PARTICIPATE AT YOUR DISCRETION. THE CITY OF WILDWOOD ENCOURAGES CITIZEN INPUT AT ALL OF ITS HEARINGS OR MEETINGS AND YOUR INVOLVEMENT WILL ASSIST IT IN REACHING THE BEST DECISION POSSIBLE FOR ALL PARTIES.

* PLEASE SEE YELLOW BOX ON OPPOSITE SIDE OF THIS MAILER FOR A LIST OF WAYS TO EITHER COMMENT ON AND/OR TRACK THIS ITEM.

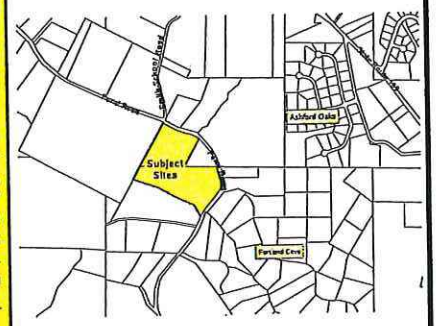

Street Address of Subject Sites:
1613 and 1725 Pond Road

THE CITY WELCOMES AND ENCOURAGES YOUR COMMENTS AND PARTICIPATION IN ITS PUBLIC PROCESSES.
THANK YOU!

The Planning and Zoning Commission of the City of Wildwood will conduct a public meeting on **Monday, December 5, 2016, at 6:30 p.m.**, **in the City Hall Council Chambers, 16860 Main Street, Wildwood, Missouri 63040** for the purposes of obtaining testimony regarding request(s) for either the modification of zoning district designations, application of special procedures, change in the underlying regulations of the Zoning Ordinance, action on Record Plats, update on zoning matters, or amendment of the Master Plan, which will then be considered for action. This meeting is open to all interested parties to comment upon this request, whether in favor or opposition, or provide additional input for consideration. If you do not have comments regarding this request, no action is required on your part. Written comments are requested to be submitted prior to this meeting and should be addressed to the Planning and Zoning Commission, City of Wildwood, 16860 Main Street, Wildwood, Missouri 63040 or via the City's website at **www.cityofwildwood.com/comment**. The following request will be considered at this time:

A response to a communication from Dionna Helfers, representative for the Pond Athletic Association, which is dated November 21, 2016, regarding **P.Z. 23-15 Pond Athletic Association**, thereby seeking the Planning and Zoning Commission's review and action upon a requested change to the existing Conditional Use Permit (CUP) to permit the use of fence slats in lieu of the required "wind screen" material, in association with the installation of sponsorship banners at this site. Additionally, a request to amend this same existing Conditional Use Permit (CUP) relative to certain outdoor lighting requirements associated with the allowable illumination of two (2) existing fields located at this facility. This facility is located on the west side of Pond Road, north of Hohmann Road (Locator Numbers: 22W330042 and 22W330051/Street Address: 1725 and 1613 Pond Road); NU Non-Urban Residence District and FPNU Floodplain District, with an amended Conditional Use Permit (CUP). **(Ward One)**

***RESIDENT OR PROPERTY OWNER - PLEASE COMMENT ON AND/OR TRACK THIS REQUEST BY:**

1) Submitting a comment online by visiting: **http://www.cityofwildwood.com/comment.**
2) Submitting a written comment prior to the hearing and addressed to the Planning and Zoning Commission, City of Wildwood, 16860 Main Street, Wildwood, Missouri 63040.
3) Viewing the Planning and Zoning Commission's agenda, which is available on the City's website at: **www.cityofwildwood.com**, the Friday before the aforementioned meeting date.

If you should have any questions regarding this information, please feel free to contact the Department of Planning at

CITY OF WILDWOOD
DEC 01 2016
DEPT OF PLANNING & PARKS

Nov. 28, 2016

Planning + Zoning Commission of Wildwood:

Regarding P.Z. 2315 Pond Athletic Assoc, I do not agree with change to the existing permit. The wind screen is enough. I do not want banners of any kind, nor any more lights.

Let keep Wildwood beautiful and not commercialized.

Thank you,

Merry Beth Dann
1449 Smith School Rd

Travis Newberry

From: noreply@cityofwildwood.com
Sent: Tuesday, November 29, 2016 4:47 PM
To: Ryan Thomas; Elizabeth Weiss; Kathy Arnett; Travis Newberry
Subject: Online Form Submittal: Public Hearing Comment Form

Public Hearing Comment Form

By utilizing this form, your comments will be considered by the Department of Planning in its development of a recommendation of this request. Additionally, the Planning and Zoning Commission, the City Council, and/or the applicable board or committee will also receive copies of your comments, as they consider the merits of these land use proposals being reviewed by the city. You must submit a separate form for each public hearing for which you have comments.

Request Being Considered	*Field not completed.*
Item Description	P.Z. 23-15 POND ATHLETIC ASSOCIATION CHANGE
Position on Request	Do Not Support
General Comments	THIS FACILITY IS TERRBLE FOR THOSE OF US WHO LIVE IN THE VICINITY. IT IS DISRUPTIVE AND THE TRAFFIC GENERTED SHOULD NOT BE ENCOURAGED BY ANY FURTHER CHANGE TO THE VENUE
Suggestions	FURTHER IMPROVEMENTS OR ADDITIONS TO THIS FACILITY SHOULD NOT BE ALLOWED.

(Section Break)

Name	THOMAS MCKEONE
Address	1409 PRAIRIE ROSE LANE
City	WILDWOOD
State	MO
Zip	63038
Phone Number	636-458-3478
Email	tmckeone@sbcglobal.net

Email not displaying correctly? View it in your browser.

Travis Newberry

From: noreply@cityofwildwood.com
Sent: Saturday, November 26, 2016 11:28 AM
To: Ryan Thomas; Elizabeth Weiss; Kathy Arnett; Travis Newberry
Subject: Online Form Submittal: Public Hearing Comment Form

Public Hearing Comment Form

By utilizing this form, your comments will be considered by the Department of Planning in its development of a recommendation of this request. Additionally, the Planning and Zoning Commission, the City Council, and/or the applicable board or committee will also receive copies of your comments, as they consider the merits of these land use proposals being reviewed by the city. You must submit a separate form for each public hearing for which you have comments.

Request Being Considered	*Field not completed.*
Item Description	P.Z. 23-15 Pond Athletic Association
Position on Request	Do Not Support
General Comments	I have great concern about allowing signage at the Pond Ball Park. This is a neighborhood field in a residential area. I do not want a billboard - effect on Pond Road. You know that sponsors will want their advertising to be seen by the most people and that will be to be visible on Pond Rd. This is not Manchester Road! I have tried to look at this from both sides, but I do not think this is a positive step.
Suggestions	At the very least, make sure that signage cannot be seen as you drive out our beautiful Pond Road. Although, I don't see how that can be done. Surely, there are other ways businesses can donate. For the few dollars it would save a parent on uniforms, think of the effect it would have on everyone else. Suggestion..I have nothing against the lighting of the ball fields, but I know how much they cost to run because we were involved parents at one time. Often, I drive by and see lights on with no games being played and no players there. There are other ways to help kids!

(Section Break)

Name	Diana Bissell
Address	1513 Whetstone Ct.

City	Wildwood
State	MO
Zip	63038
Phone Number	636-458-6008
Email	dianabissell@sbcglobal.net

Email not displaying correctly? View it in your browser.

RANDY
BURKETT
LIGHTING
DESIGN

To: Joe Vujnich

From: Ron Kurtz

Subject: City of Wildwood – Pond Athletic Association Lighting Review

Date: October 10, 2016

Copies: Kathy Arnett
File/

We have reviewed the most recent (10/4/16) documentation submitted for the proposed baseball/softball field additions at the Pond Athletic Association fields. The resubmittal did not address fully the concerns below: *(Note: Some items may not be addressable and are noted.)*

Specific sections include:

Section 415.450.D.5.a

All light fixtures, including lighting associated with single-family dwellings, but excluding street lighting, shall be designed, installed and maintained to prevent light trespass as specified below:

a. At the property line of subject property, illumination from light fixtures shall not exceed one-tenth (0.1) footcandles on residentially zoned property, as measured in a vertical plane five (5) feet above the ground. Every reasonable effort shall be made (through placement and lighting control devices) to minimize the visibility of any luminaire that is required to be fully shielded.

Note: ***It is understood that sports lighting may not comply with this section, and non-compliance will not necessarily discriminate against its acceptance.***

Section 415.450.E.3

Specifically, lighting plans submitted for review and approval as part of a site development plan or preliminary plat shall include a layout of proposed luminaire locations, including aiming angles, minimum and average illuminances for each area, uniformity ratios, a description of this equipment (catalog cuts), glare control devices, lamps, mounting heights and means, hours of operation, maintenance methods proposed, location and use of adjacent properties and an illumination (foot-candle) grid demonstrating adequate intensities and uniformity. The illuminance grid scale must be maximized to the extent of a thrity (30) inches by forty-two (42) inches drawing. Also, a calculation of vertical luminance along the property line at five (5) feet above the ground is required to show compliance with Subsection (D)(5)(a). Additional submissions may be required showing greater detail of areas that may require further clarification.

Note: ***A fixture cut showing all intended glare control devices has not been provided. There are images suggesting that glare control visors will be provided, but no definitive statement, cutsheet, or specification.***

Note: ***The photometric document provided suggests that the west property line, and much of the south and north do not meet this requirement. This is not pejorative, but a point of concern. Particularly along the west property line where values range from 1 to 55 footcandles and are notably poor along the softball field.***

As the manufacturer, again, has not provided lighting fixture cuts and photometry we cannot determine if the illuminance take into account any potential glare control devices.

Regardless, as the west property line does not abut, currently, any nearby residences this may not be a significant concern for the foreseeable future.

Section 415.450.I.1.c Notwithstanding any existing zoning authorization or permit to the contrary, after the effective date of this Chapter, all events shall be scheduled so as to complete all activity before or as near to 10:00 P.M. (as practical), but, under no circumstances, shall any illumination of the playing field, court or track be permitted after 10:30 P.M., except to conclude a scheduled event that was in progress before 10:30 P.M. and for which circumstances prevented concluding it before this time.

Note: Pond Athletic Association to supply compliance statement to the City.

If the manufacturer can provide information stating that the glare control devices will be provided, that Pond Athletic and/or the lighting manufacturer will address neighbor concerns if light trespass or glare is excessive, and that the lights are turned off at the appropriate time, then we would recommend approving if the City is accepting of the light trespass. *(Note: If there are any plans to develop property to the west of the fields then there is cause for concern, depending upon the plans.)*

Upon your review please contact us with any questions or comments.

RK:vh

Pond Athletic Association

"Serving the Youth of West County Since 1963"

Executive Board
Keith Ellis, *President*
Dionna Helfters, *Vice -President*
Bob Kraemer, *Vice-President*
Pat Steilage, *Secretary*
Tony Gannon, *Treasury*
Jeff Plunkett, *Past President*

Board of Directors
Alexander, Jason
Ancel, Terry
Beeler, Brent
Bievenue, Jeff
Bobbitt, Justin
Brown, Kip
Burns, Andrew
Callier, Jason
Cizek, Garrett
Cook, Judd
Garrison, Kevin
Heady, Mark
Herbst, Judy
Jones, Mike
Lochmann, Andy
Lochmann, Angela
Long, Diane
Long, Gary
Murray, Dan
Sommers, Tim

Directors Emeritus
Archeski, Rick
Hoekstra, John

June 27, 2016

CITY OF WILDWOOD
JUN 30 2016
DEPT OF PLANNING & PARKS

Mr. Joe Vujnich
Director of Planning and Parks
City of Wildwood
16860 Main St.
Wildwood, MO 63040

Dear Joe,

This letter is being to you as the Director of Planning and Parks for the City of Wildwood as an assurance from Pond Athletic Association's that it will continue to adhere to the lighting curfew of 10:30 pm. This commitment to adhere is for the current lighting on Fields 1, 2, & 3 and also for the new lighting, once installed, on Fields 4 & 5.

Sincerely,

Keith Ellis
President, Pond Athletic Association

P.O. Box 111
Wildwood, MO 63038
Not-For-Profit Organization. MO. Tax ID # 43-1075893.
501 (C) (3) Corporation

Pole / Fixture Summary

Pole ID	Pole Height	Fixture Qty	Lamp Type	Group
A1	60'	4	1500W MZ	A
		4	1500W MZ	B
A2	60'	4	1500W MZ	A
A3	60'	4	1500W MZ	B
B1	60'	8	1500W MZ	A
B2	60'	8	1500W MZ	A
B3	60'	8	1500W MZ	B
B4	60'	8	1500W MZ	B
C1	60'	5	1500W MZ	A
C2	60'	5	1500W MZ	A
9		*58*		

Calculation Grid Summary

Grid Name	Calculation Metric	Light Level				Uniformity		Groups	Fixture Qty
		Type	Ave	Min	Max	Max/Min	Ave/Min		
Baseball (Infield)	Horizontal Illuminance	Constant	50.7	34	66	1.91	1.47	A	34
Baseball (Outfield)	Horizontal Illuminance	Constant	32.4	23	56	2.41	1.38	A	34
Property Spill - 3' AGL	Horizontal	Constant	1.26	0	33.3	0.00	0.00	A,B	58
Property Spill - 3' AGL	Max Vertical Illuminance Metric	Constant	2.67	0	51.4	0.00	0.00	A,B	58
Softball (Infield)	Horizontal Illuminance	Constant	50.4	35	62	1.80	1.46	B	24
Softball (Outfield)	Horizontal Illuminance	Constant	30.4	19	54	2.84	1.61	B	24

Group Summary

Group	Description	Load	Fixture Qty
A	Baseball	53.18 kW	34
B	Softball	37.54 kW	24

MY PROJECT

Name: **Pond Athletic Association Softball**
Location: Glencoe,MO

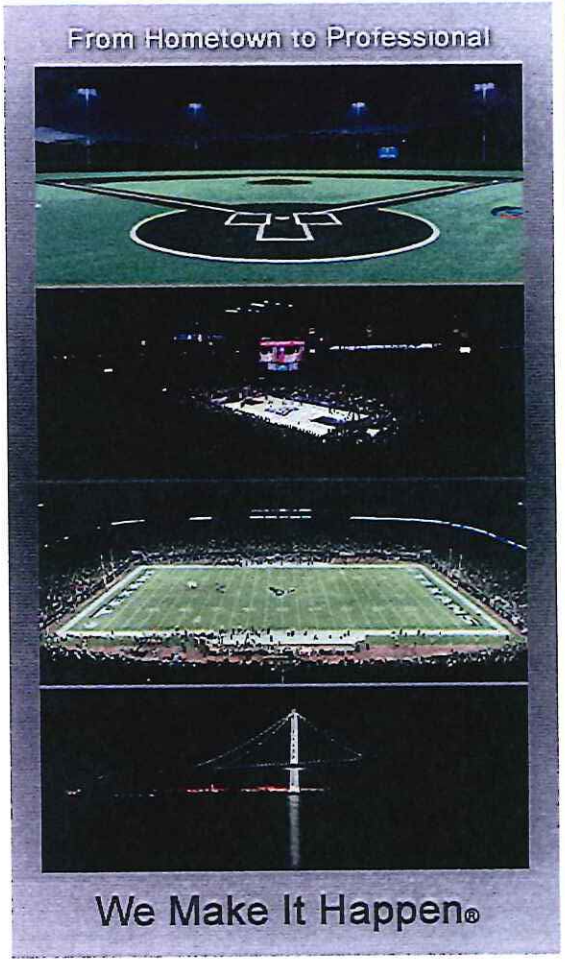

ENGINEERED DESIGN

By: **Justin Van Soelen**
File # / Date: 111042R2-prodR3 23-Aug-16

Not to be reproduced in whole or part without the written consent of Musco Sports Lighting, LLC. ©1981, 2016 Musco Sports Lighting, LLC.

QUIPMENT LIST FOR AREAS SHOWN

Pole				Luminaires				
Y	LOCATION	SIZE	GRADE ELEVATION	MOUNTING HEIGHT	LAMP TYPE	QTY / POLE	THIS GRID	OTHER GRIDS
.	A1	60'	-	60'	1500W MZ	4/4*	4	4
.	A3	60'	-	60'	1500W MZ	4	4	0
2	B3-B4	60'	-	60'	1500W MZ	8	8	0
4	TOTALS					28	24	4

his structure utilizes a back-to-back mounting configuration

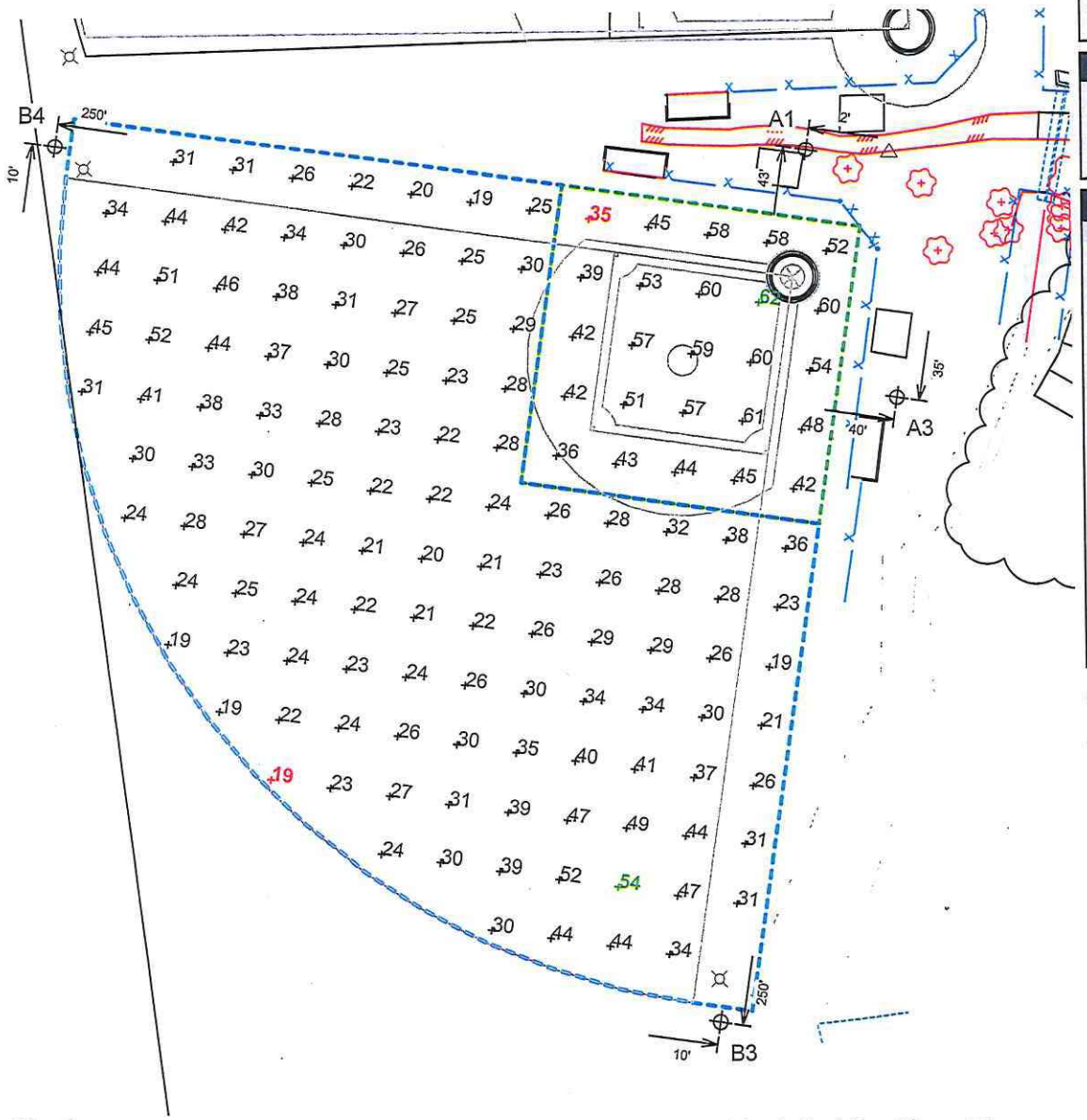

SCALE IN FEET 1 : 60

0' 60' 120'

Pole location(s) ⊕ dimensions are relative to 0,0 reference point(s) ⊗

musco Lighting

MY PROJECT

Name:	Pond Athletic Association Softball
Location:	Glencoe,MO

GRID SUMMARY

Name:	Softball
Size:	245'/245'/245' - basepath 60'
Spacing:	20.0' x 20.0'
Height:	3.0' above grade

CONSTANT ILLUMINATION

SUMMARY	HORIZONTAL FOOTCANDLES	
	Infield	Outfield
Guaranteed Average:	50	30
Scan Average:	50.4	30.4
Maximum:	62	54
Minimum:	35	19
Avg / Min:	1.46	1.61
Guaranteed Max / Min:	2	3
Max / Min:	1.80	2.84
UG (adjacent pts):	1.35	1.56
CU:	0.59	
No. of Points:	25	115

LUMINAIRE INFORMATION	
Luminaire Type:	Green Generation
Design Usage Hours:	5,000 hours
Design Lumens:	134,000
Avg Lamp Tilt Factor:	1.000
No. of Luminaires:	24
Avg KW:	37.54 (40.8 max)

Guaranteed Performance: The Guaranteed Average CONSTANT ILLUMINATION described above is guaranteed for the design usage hours of the system.

Field Measurements: Illumination measured in accordance with IESNA RP-6-15 and CIBSE LG4. Individual values may vary. See the Warranty document for details.

Electrical System Requirements: Refer to Amperage Draw Chart and/or the **"Musco Control System Summary"** for electrical sizing.

Installation Requirements: Results assume +/- 3% nominal voltage at line side of the ballast and structures located within 3 feet (1m) of design locations.

ENGINEERED DESIGN

By:	Justin Van Soelen	
File # / Date:	111042R2-prodR3	23-Aug-16

Not to be reproduced in whole or part without the written consent of Musco Sports Lighting, LLC. ©1981, 2016 Musco Sports Lighting, LLC.

ILLUMINATION SUMMARY

EQUIPMENT LIST FOR AREAS SHOWN

Pole				Luminaires				
QTY	LOCATION	SIZE	GRADE ELEVATION	MOUNTING HEIGHT	LAMP TYPE	QTY / POLE	THIS GRID	OTHER GRIDS
1	A1	60'	-	60'	1500W MZ	4/4*	4	4
1	A2	60'	-	60'	1500W MZ	4	4	0
2	B1-B2	60'	-	60'	1500W MZ	8	8	0
2	C1-C2	60'	-	60'	1500W MZ	5	5	0
6	TOTALS					38	34	4

* This structure utilizes a back-to-back mounting configuration

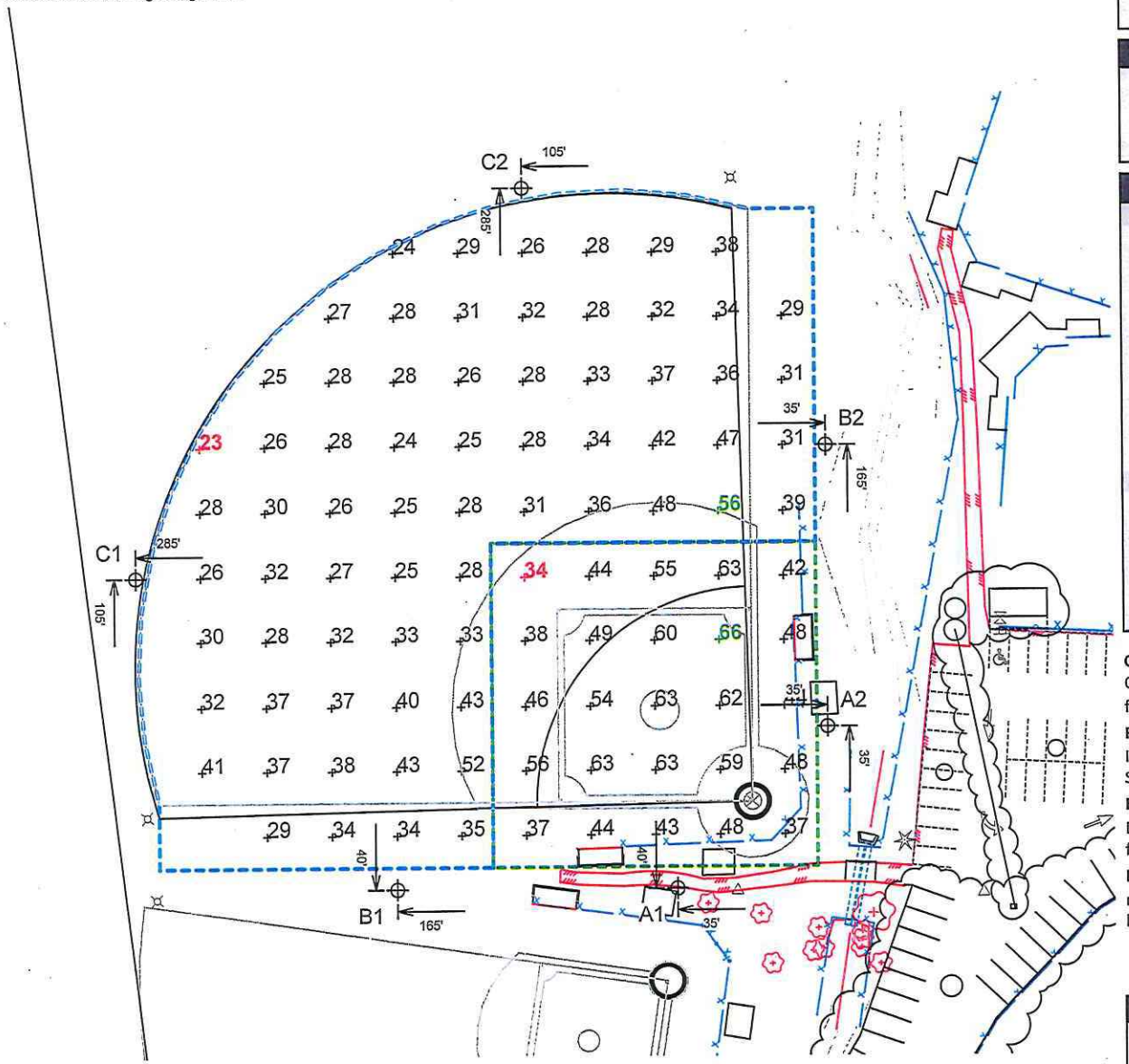

SCALE IN FEET 1 : 80

0' 80' 160'

Pole location(s) ⊕ dimensions are relative to 0,0 reference point(s) ⊗

MY PROJECT

Name: **Pond Athletic Association Softball**
Location: Glencoe,MO

GRID SUMMARY

Name: **Baseball**
Size: 275'/310'/275' - basepath 90'
Spacing: 30.0' x 30.0'
Height: 3.0' above grade

CONSTANT ILLUMINATION

SUMMARY	Infield	Outfield (HORIZONTAL FOOTCANDLES)
Guaranteed Average:	**50**	**30**
Scan Average:	50.7	32.4
Maximum:	66	56
Minimum:	34	23
Avg / Min:	1.47	1.38
Guaranteed Max / Min:	**2**	**2.5**
Max / Min:	1.91	2.41
UG (adjacent pts):	1.50	1.54
CU:	0.68	
No. of Points:	25	67

LUMINAIRE INFORMATION

Luminaire Type: Green Generation
Design Usage Hours: 5,000 hours
Design Lumens: 134,000
Avg Lamp Tilt Factor: 1.000
No. of Luminaires: 34
Avg KW: 53.18 (57.8 max)

Guaranteed Performance: The Guaranteed Average CONSTANT ILLUMINATION described above is guaranteed for the design usage hours of the system.

Field Measurements: Illumination measured in accordance with IESNA RP-6-15 and CIBSE LG4. Individual values may vary. See the Warranty document for details.

Electrical System Requirements: Refer to Amperage Draw Chart and/or the **"Musco Control System Summary"** for electrical sizing.

Installation Requirements: Results assume +/- 3% nominal voltage at line side of the ballast and structures located within 3 feet (1m) of design locations.

ENGINEERED DESIGN

By: **Justin Van Soelen**
File # / Date: 111042R2-prodR3 23-Aug-16

Not to be reproduced in whole or part without the written consent of Musco Sports Lighting, LLC. ©1981, 2016 Musco Sports Lighting, LLC.

ILLUMINATION SUMMARY

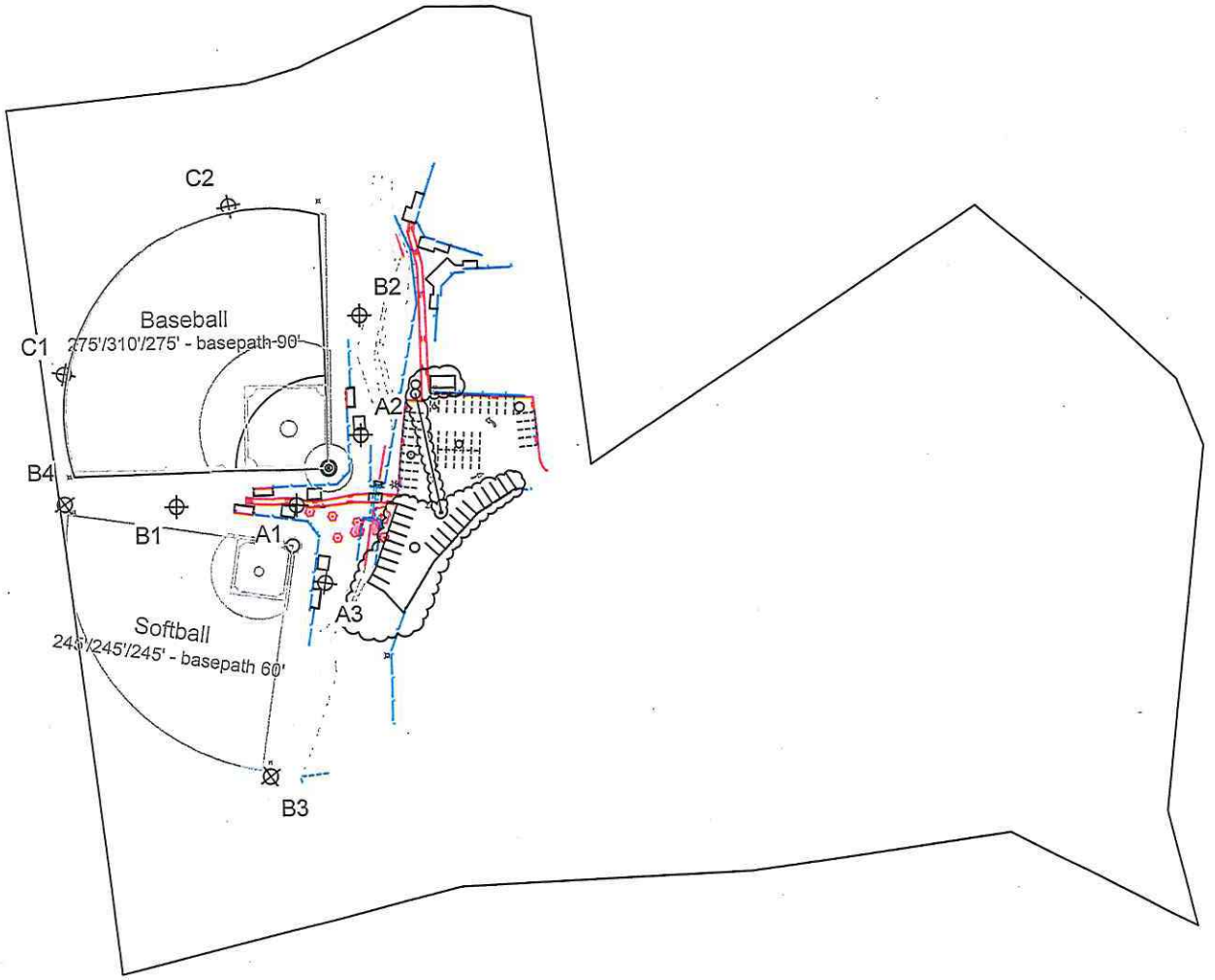

MY PROJECT

Name: Pond Athletic Association Softball
Location: Glencoe,MO

EQUIPMENT LAYOUT

INCLUDES:
- Baseball
- Softball

Electrical System Requirements: Refer to Amperage Draw Chart and/or the **"Musco Control System Summary"** for electrical sizing.

Installation Requirements: Results assume +/- 3% nominal voltage at line side of the ballast and structures located within 3 feet (1m) of design locations.

EQUIPMENT LIST FOR AREAS SHOWN

Pole				Luminaires		
QTY	LOCATION	SIZE	GRADE ELEVATION	MOUNTING HEIGHT	LAMP TYPE	QTY / POLE
1	A1	60'	-	60'	1500W MZ	4/4*
2	A2-A3	60'	-	60'	1500W MZ	4
4	B1-B4	60'	-	60'	1500W MZ	8
2	C1-C2	60'	-	60'	1500W MZ	5
9	TOTALS					58

* This structure utilizes a back-to-back mounting configuration

SINGLE LUMINAIRE AMPERAGE DRAW CHART

Ballast Specifications (.90 min power factor)	Line Amperage Per Luminaire (max draw)						
Single Phase Voltage	208 (60)	220 (60)	240 (60)	277 (60)	347 (60)	380 (60)	480 (60)
1500 watt MZ	8.6	8.3	7.5	6.5	5.1	4.7	3.7

ENGINEERED DESIGN

By: Justin Van Soelen
File # / Date: 111042R2-prodR3 23-Aug-16

SCALE IN FEET 1 : 200
0' 200' 400'

Pole location(s) ⊕ dimensions are relative to 0,0 reference point(s) ⊗

Not to be reproduced in whole or part without the written consent of Musco Sports Lighting, LLC. ©1981, 2016 Musco Sports Lighting, LLC.

EQUIPMENT LAYOUT

Mounting heights

Appropriate mounting heights or additional poles allow for optimum aiming angles:

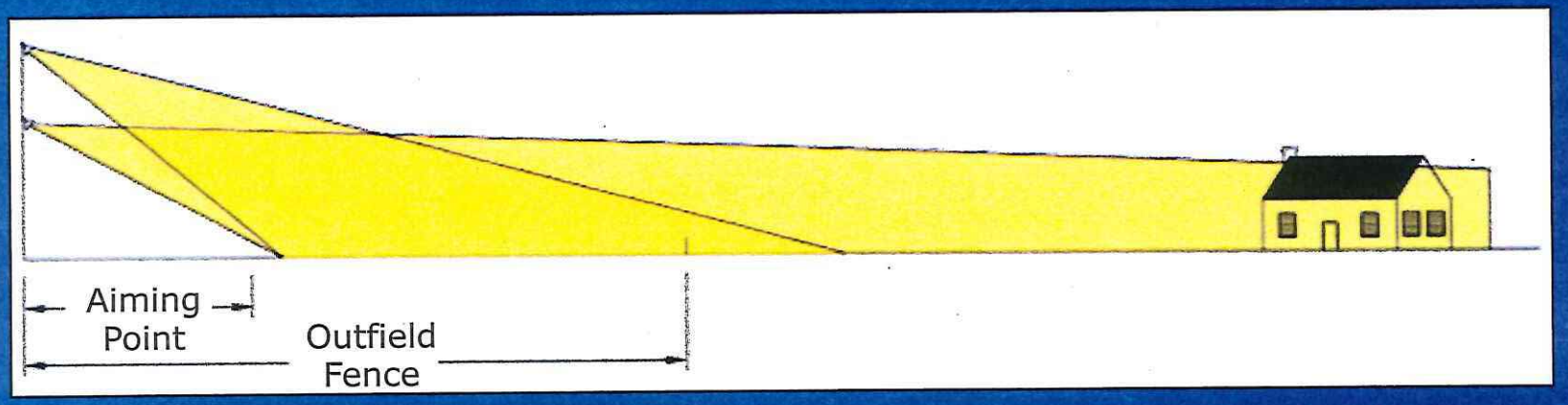

y

Pole Height	Fixture Qty	Lamp Type	Group
52	4	1500W MZ	A
	4	1500W MZ	B
	4	1500W MZ	A
60'	4	1500W MZ	B
60'	4	1500W MZ	A
60'	4	1500W MZ	A
60'	4	1500W MZ	A
60'	4	1500W MZ	B
60'	4	1500W MZ	B
60'	5	1500W MZ	A
60'	5	1500W MZ	A
	54		

mary

Calculations	Type	Value Found				Guidelines		Grade	Fixture Qty
		Min	Ave	Max	Min/Ave	Max/Min	Ave/Min		
Horizontal Illuminance	Calculated	10.7	24	49	1.64	4.43	1.43	A	54
Horizontal Illuminance	Calculated	22.4	33	57	2.43	1.30	1.30	A	54
Horizontal	Calculated	1.29	6	34.6	0.00	0.00	0.00	A,B	54
Max Vertical Illuminance Glare	Calculated	2.64	6	54.3	0.00	0.00	0.00	A,B	54
Horizontal Illuminance	Calculated	10.4	24	47	1.60	1.49	1.49	B	54
Horizontal Illuminance	Calculated	20.2	14	54	2.61	1.36	1.36	B	54

Miscellaneous	Total	Fixture Qty
Conduit	52.10 kW	54
Setback	37.54 kW	54

musco lighting

MY PROJECT

Name: Pond Athletic Association Softball
Location: Clinton MO

Image Generated on: 2-Feb-2015 09:06:31

We Make It Happen.

Submitted By/Contact:

By: Jackie Van Zandt
Title or Date: 12/08/2014 (modified) 30-Sep-15

This is to be reproduced in whole or part without the written consent of Musco Sports Lighting, LLC. ©1991, 2015 Musco Sports Lighting, LLC.

PROJECT SUMMARY

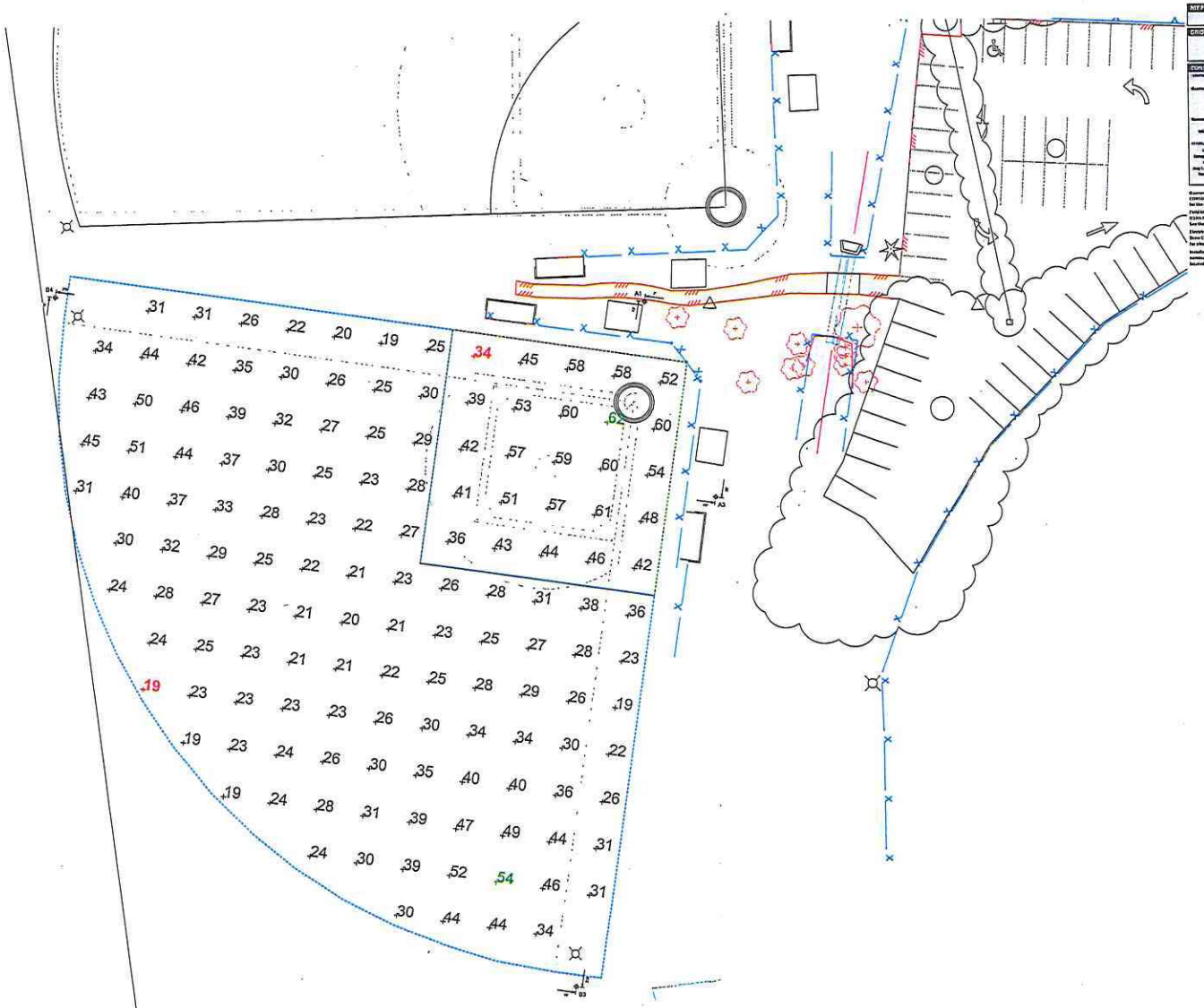

musco Lighting

MF PROJECT

Name: Hard Asphalt Jurassic Park Sandbank
Location: Geneva, MO

GRID SUMMARY

Status: Initial
Size: 242'2"x1'2"x0" - 0.sqrtft 10'
Spacing: 20'-0" x 20'-0"
Height: 1'-0" above grade

POINT INSTANT ILLUMINATION

	Initial	Outfield
Maintained Average	50	30
Spot Average	80.4	25.2
Maximum	62	54
Minimum	31	19
Avg / Min	1.61	1.58
Maintained Area / Min	2	1
Max / Min	2.00	2.84
Min / Adjacent pole	1.29	1.15
No. of Poles	25	115

OVERALL MAINTENANCE

Luminaire Type:	Score Generation
Lamps Usage Hours:	5,000 hours
Lamps Lumens:	139,000
Avg Lamp Fill Factor:	1.000
No. of Luminaire:	25
Avg kW:	12.54 (12.0 max)

Guaranteed Performance: The Geneva Initial Average CONSTANT ILLUMINATION does not allow alone is guaranteed for the design usage hours of the system.

Field Measurements: Photometrics measured in accordance with IESNA RP-6-15 and CIBSE LG5. Individual values may vary. See the Warranty document for details.

Electrical System Requirements: Refer to Amperage Score Chart and/or the "Musco Control System Summary" for electrical sizing.

Installation Requirements: Results assume +/- 2% nominal ratings at line side of the fixture and structures located within 3 feet (1m) of design locations.

SWITCHED DESIGN

By: Jacob Van Landes
Rev / Date: 111342352 pro001 20-Sep-22

Not to be reproduced in whole or part without the written permission of Musco Sports Lighting, LLC ©2021, 2015 Musco Sports Lighting, LLC.

SCALE IN FEET 1:20

ILLUMINATION SUMMARY

24 29 27 26 28 38
26 28 31 34 28 31 33 28
25 27 28 27 31 33 34 34 30
23 26 28 24 25 29 35 41 45 30
28 30 27 25 28 33 39 50 57 39
26 32 27 25 28 36 46 57 63 42
30 28 32 33 33 38 49 60 66 48
32 37 37 41 43 45 53 63 62 44
41 37 37 43 53 56 63 63 59 48
29 34 34 35 37 44 43 48 37
MY PROJECT
GRID SUMMARY
CONSTANT ILLUMINATION
ILLUMINATION SUMMARY

LUMINAIRE BREAKDOWN

Qty	Mark Number	Luminaire Type	Lamps per Luminaire	Watts per Lamp	Total Watts
1	A1	[illegible]	1	[illegible]	[illegible]
1	A2	[illegible]	1	[illegible]	[illegible]
1	A3	[illegible]	1	[illegible]	[illegible]
1	B1	[illegible]	1	[illegible]	[illegible]
1	B2	[illegible]	1	[illegible]	[illegible]
1	B3	[illegible]	1	[illegible]	[illegible]
1	C1	[illegible]	1	[illegible]	[illegible]
1	C2	[illegible]	1	[illegible]	[illegible]

musco Lighting

MY PROJECT

Name: Pickle Ball Facility Association Sarlisoft

Log phone: 5[illegible]

GRID SUMMARY

Name: Property Grid + 5' Offset

Spacing: 5.0'

Height: 5.0' above grade

CONSTANT ILLUMINATION

Summary

	Entire Grid
Avg Footcandles:	3.2 fc
Maximum:	37.0 fc
Minimum:	0.00
Max. of Points:	922
Avg/Min Ratio:	10.00:1
Max/Min Ratio:	37.00:1
Luminaire Type:	Green Generation
Design Hours/Year:	5,000 hours
Design Currency:	$1.0 USD
Avg Lamp Life Lumen:	1.000
No. of Luminaires:	56
Avg Kilo:	56.71 (56.6 m/s)

Guaranteed Performance: The CONSTANT ILLUMINATION described above is guaranteed for the design usage hours of the system.

Field Measurements: Measurements measured in accordance with IESNA RP-6-15 and CIE12 1.6. Individual values may vary. See the Warranty Statement for details.

Check of System Requirements: Refer to Appendix Show Chart under the "Musco Control System Summary" for electrical wiring.

Installation Requirements: Mounts greater ch 3% slope of surface or for side of the ballast and structure located within 3 feet (1m) of design locations.

TRIM/FINISH DESIGN

Rpt: Pickle Ball Sarlisoft

Lgrd / Date: 2120N2-Grid01 30-Sep-14

Not to be reproduced or shared or used without the written consent of Musco Sports Lighting, LLC. ©1981, 2014 Musco Sports Lighting, LLC.

Note: Sub-Grid(s) ⊕ Illuminations are relative to Active Grid(s) ⊕

E IN FEET 1:150

ILLUMINATION SUMMARY

AREA BREAKDOWN

Luminaire						
Area Name	Qty	Luminaire Type	Pole Ht	Arm	Fixture	Lamp
[illegible]	[illegible]	[illegible]	[illegible]	[illegible]	[illegible]	[illegible]
[illegible]	[illegible]	[illegible]	[illegible]	[illegible]	[illegible]	[illegible]
[illegible]	[illegible]	[illegible]	[illegible]	[illegible]	[illegible]	[illegible]
[illegible]	[illegible]	[illegible]	[illegible]	[illegible]	[illegible]	[illegible]
[illegible]	[illegible]	[illegible]	[illegible]	[illegible]	[illegible]	[illegible]

musco lighting

MY PROJECT

Name: [illegible]
Location: [illegible]

GRID SUMMARY

Name: Property Split - 3' AGL
Spacing: 5.0'
Height: 3.0' above grade

CONSTANT ILLUMINATION

Statistic	Value
Scale	1:90
Unit	Imperial (Feet)
Calculation Type	Point Grid
Base Average	3.83fc
Maximum	54.15
Minimum	0.00
No. of Points	922
Luminaire Type	Genera Generation
Burn Hours	5,000 hours
Design Lumens	114,000
Avg Lamp Dbl Lumens	2,000
No. of Luminaires	58
Avg Ht	30.1' (10.0 m)

Guaranteed Performance: The CONSTANT ILLUMINATION described above is guaranteed for the design usage hours of the system.

Field Measurements: Illumination measured in accordance with IESNA RP-8-21 and CIE13.3&4. Individual values may vary. See the Warranty document for details.

Electrical System Requirements: Refer to Amperage Draw Chart and/or the "Musco Control System Summary" for start/stop timing.

Installation Requirements: Results assume +/- 3% manufacturing tolerance of fixtures and lamps and installation within 2 ft (0.61m) of design locations.

Engineered Design

Dgn: Justin Van Scoyoc
Date / Time: 11/20/2023 [illegible]
Site ID: [illegible]

This is an original and unpublished work of Musco Sports Lighting, LLC (MSL), and Musco Sports Lighting, LLC

1 FEET 1 : 90

ILLUMINATION SUMMARY

musco lighting

MY PROJECT:

Owner: [illegible]
Location: [illegible]

EQUIPMENT LAYOUT

INCLUDES:
- Symbols
- Surface

Electrical System Requirements: Refer to Amperage Draw Chart and/or the "Musco Control System Summary" for electrical sizing.

Installation Requirements: Results assume +/- 1% mean illuminance at face side of the ballfield and structures located within 3 feet (1m) of design locations.

EQUIPMENT LIST FOR AREAS SHOWN

QTY	LUMINAIRE	MOUNT	ARMS	ARMS	POLE	POLE	PAGE
		Height	Length	Orientation	Type	Finish	
4	[illegible]	50'	[illegible]	[illegible]	[illegible]	[illegible]	[illegible]
4	[illegible]	50'	—	[illegible]	[illegible]	[illegible]	[illegible]
4	[illegible]	50'	—	[illegible]	[illegible]	[illegible]	[illegible]
4	[illegible]	50'	—	[illegible]	[illegible]	[illegible]	[illegible]
4	[illegible]	50'	—	[illegible]	[illegible]	[illegible]	[illegible]

* Pole selection assumes a back tip-back mounting shoe/ pole base

[illegible] ESTIMATED AMPERAGE DRAW CHART

Nominal System Voltage	Total Amperage Draw							
Single Phase Voltage	[illegible]	[illegible]	[illegible]	[illegible]	[illegible]	[illegible]	[illegible]	[illegible]
[illegible]	[illegible]	[illegible]	[illegible]	[illegible]	[illegible]	[illegible]	[illegible]	[illegible]

Note: Symbol(s) ⊕ dimensions are indicated in feet (or meters [metric]) ⊕

ENGINEERED DESIGN

Proj. [illegible]
File / Date: [illegible] 30 Sep 14

Not to be reproduced or used in whole or part without the written consent of Musco Sports Lighting, LLC. [illegible], 2014 Musco Sports Lighting, LLC

1 IN FEET 1:50

EQUIPMENT LAYOUT

Luminaire Plane	Pole Location X	Pole Location Y	Light Bank Mounting Height	Indicator Width Type	Number	Aiming Point X	Aiming Point Y	Aiming Point Z	Aiming Angle Horiz	Aiming Angle Vert	Group
Baseball	-40.00	30.00	60.00		1	18.26	-23.76	0.00	6.48	50.38	A
					2	24.79	102.15	0.00	6.53	42.42	A
					3	96.72	31.44	0.00	1.21	31.99	A
					4	84.52	44.34	0.00	8.73	35.75	B
					5	-64.52	118.19	0.00	1.45	47.31	B
					6	93.53	37.31	0.00	8.42	39.14	B
					7	-134.57	119.92	0.00	8.39	29.91	B
					8	-144.54	88.61	0.00	11.46	32.38	A
Softball	30.00	-25.00	40.00		9	130.50	37.77	0.00	1.51	46.98	A
					10	-15.53	2.48	0.00	8.26	24.66	A
					11	82.41	98.79	0.00	1.41	27.47	B
					12	15.15	77.97	0.00	8.49	42.75	B
					13	-19.99	5.05	0.00	1.52	45.90	B
					14	-5.19	83.26	0.00	8.18	37.95	B
Baseball	-40.00	30.00	60.00		15	71.74	28.50	0.00	1.12	27.67	B
					16	98.41	99.32	0.00	8.44	20.80	A
					17	30.56	52.08	0.00	1.34	21.45	A
					18	79.24	253.35	0.00	8.12	18.65	A
Baseball	-40.00	140.00	60.00		19	120.63	112.25	0.00	1.17	19.66	A
					20	118.28	214.37	0.00	8.04	21.51	A
					21	26.47	36.58	0.00	1.11	20.80	A
					22	12.07	271.90	0.00	8.24	19.15	A
					23	185.36	88.44	0.00	9.19	19.36	A
					24	121.34	157.61	0.00	0.39	22.85	A
Baseball	140.00	-25.00	60.00		25	290.34	72.48	0.00	1.32	23.14	A
					26	81.15	46.18	0.00	1.10	22.24	A
					27	140.71	187.47	0.00	1.23	21.78	A
					28	106.08	151.20	0.00	0.89	20.81	A
					29	247.84	4.51	0.00	1.16	20.99	A
					30	30.12	8.53	0.00	0.12	21.61	A
					31	199.92	122.06	0.00	1.34	21.86	A
					32	83.51	51.87	0.00	0.21	17.63	B
					33	62.15	76.45	0.00	1.19	17.44	B
					34	156.32	199.23	0.00	0.19	17.44	B
Softball	-10.00	210.00	60.00		35	82.96	86.37	0.00	1.09	17.60	B
					36	139.37	133.11	0.00	0.37	16.46	B
					37	11.38	19.98	0.00	1.23	17.34	B
					38	180.18	162.91	0.00	0.14	16.91	B
					39	197.13	184.74	0.00	1.13	16.31	B
					40	147.89	154.22	0.00	0.10	17.06	B
					41	187.12	194.95	0.00	1.09	16.95	B
Softball	210.00	-10.00	60.00		42	77.09	79.33	0.00	0.14	16.87	B
					43	152.38	158.20	0.00	1.49	17.17	B
					44	117.38	121.94	0.00	0.22	16.78	B
					45	179.48	163.98	0.00	1.34	16.44	B
					46	70.74	9.67	0.00	0.13	17.81	B
					47	140.58	141.27	0.00	1.19	17.29	B
					48	81.41	80.42	0.00	0.98	20.08	A
Baseball	120.00	210.00	60.00		49	8.37	251.96	0.00	1.09	20.21	A
					50	218.98	212.98	0.00	0.15	22.41	A
					51	-0.90	155.13	0.00	1.43	22.03	A
					52	193.27	211.51	0.00	1.79	21.44	A
					53	132.91	120.23	0.00	0.54	22.32	A
					54	212.43	202.94	0.00	1.46	20.23	A
Baseball	210.00	105.00	60.00		55	290.36	-2.41	0.00	0.42	22.51	A
					56	164.42	199.33	0.00	1.4	21.06	A
					57	141.64	84.87	0.00	0.16	22.54	A
					58	142.31	125.00	0.00			

musco lighting

MP PROJECT

Drawing: Pond Athletic Association Softball
Layout Name: Glenora DFO

Zone Designation	Group
Zone1	B
Zone2	A
Zone3	A,B

This is to be completed as a show on field without the endorsement of Musco Sports Lighting, LLC. At Musco, We're Shown Sports Lighting, LLC.

AIMING SUMMARY

Light·Structure GREEN™

Luminaire Assembly

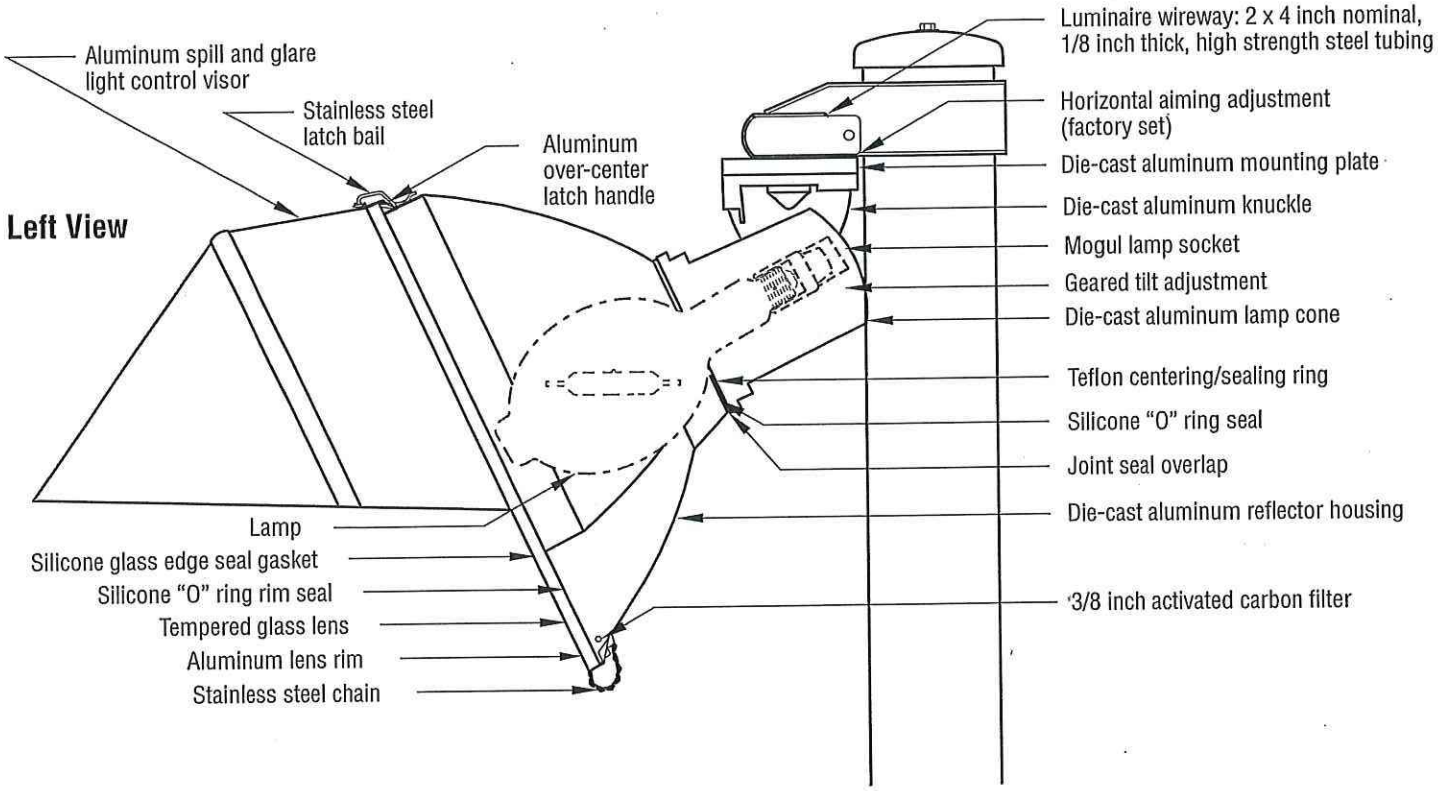

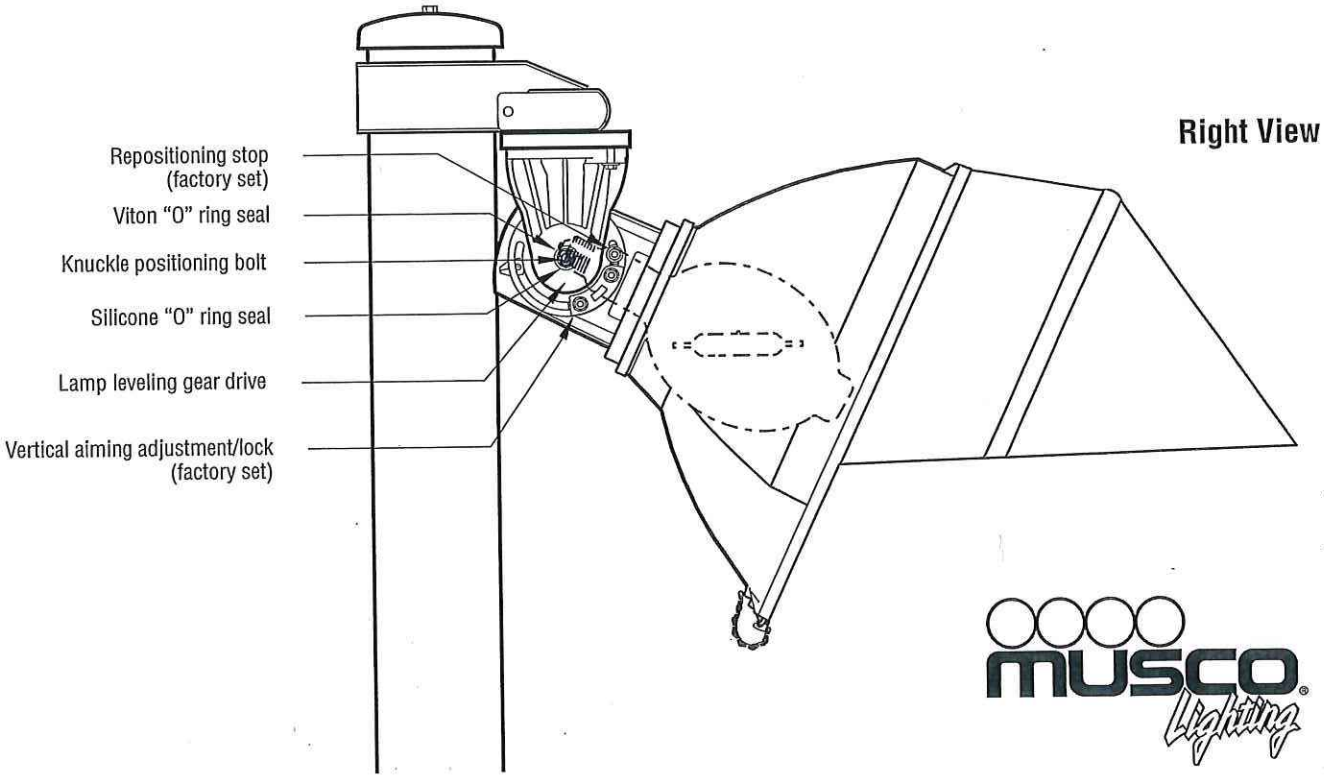

800/825-6030
www.musco.com
lighting@musco.com

Patents issued and pending.

© 2005, 2011 Musco Lighting · SLA2

MUSCO LIGHTING SUBMITTAL FOR PRODUCTION
PREPARED FOR:

Pond Athletic Association Softball

Lighting Project
Glencoe, MO
October 4, 2016

Project #111042

Submitted by:
Musco Sports Lighting, LLC

2107 Stewart Road
Muscatine, Iowa 52761
Toll Free: 800-756-1205
Fax: 800-374-6402

We Make It Happen.

This information is provided by Musco exclusively for this project. Reproduction or distribution of the enclosed documents or information withough the written permission of

A. BILL OF MATERIALS

B. LIGHTING DESIGN

C. CONTROLS AND MONITORING

D. STRUCTURAL INFORMATION

E. WARRANTY

F. PRODUCT INFORMATION

A. BILL OF MATERIALS

Pole / Fixture Summary

Pole ID	Pole Finish	Fixture Qty	Lamp Type	Group
A1	50'	4	1500W HIC	A
		4	1500W HIC	B
A2	50'	4	1500W HIC	A
A3	50'	4	1500W HIC	B
B1	50'	4	1500W HIC	A
B2	50'	4	1500W HIC	A
B3	50'	4	1500W HIC	B
B4	50'	4	1500W HIC	B
C1	50'	4	1500W HIC	A
C2	50'	4	1500W HIC	A
8		32		

Calculation Grid Summary

Grid Name	Calculation Metric	Type	Light Level Min	Max	Avg	Uniformity Min/Avg	Min/Max	Average	Fixtures	Fixture Qty
Baseball (Infield)	Horizontal Illuminance	Constant	50.7	86	69	1.36	1.25	A		24
Baseball (Outfield)	Horizontal Illuminance	Constant	22.4	23	57	2.43	1.29	A		24
Property Spill - (F.Ft)	Footpaint	Constant	1.25	0	34.6	0.00	0.00	A,B		32
Property Spill - (F.Ft)	Max Vertical Illuminance Metric	Constant	3.60	0	54.2	0.00	0.00	A,B		32
Softball (Infield)	Footpaint Illuminance	Constant	50.4	74	62	1.48	1.18	B		24
Softball (Outfield)	Footpaint Illuminance	Constant	24.2	19	54	2.21	1.54	B		24

Group Summary

Group	Description	Lamp	Fixture Qty
A	Baseball	32 1500W	24
B	Softball	32 1500W	24

musco lighting

MY PROJECT

Project Name: Pond Athletic Association Sa
Location: Glencoe,MN

We Make It Happe

ENGINEERED DRAWING

By: Justin Van Loolee
File # / Date: 111042262 pm2k5

Not to be reproduced in whole or part without the wr
Musco Lighting LLC ©1981, 2010 Musco Sports Lig

PROJECT

musco Lighting

MLT PROJECT

Name: Pond Athletic Association

Location: Conway, MO

EQUIPMENT LAYOUT

INCLUDES:
- Baseball
- Softball

Electrical System Requirements: Refer to Amperes in Chart and/or the "Musco Control System Sp for site electrical eng.

Installation Requirements: Results assume +/- 3% nominal voltage at line side of the fixture and ne located within 5 feet (1m) of design location.

EQUIPMENT LIST/GRAND TOTALS SHOWN

Qty.	Location	Pole	Luminaire	Mounting	Aim
A	A1	80'	[illegible]	90°	[illegible]
B	B1	80'	[illegible]	90°	[illegible]
C	C1	80'	[illegible]	90°	[illegible]
D	C2	80'	[illegible]	90°	[illegible]
E	C3	80'	[illegible]	90°	[illegible]
F	C4	80'	[illegible]	90°	[illegible]

* Only recommended without a back visor/hood, downspillage and glare

Amps | L-L (Line-Line) | L-N (Line-Neutral) | Line Impedance

Subject Specific plans: Line-to-neutral	Line-Impedance			
Single Phase Voltage	208	208	240	277
	277	277	415	240
Line-to-neutral	0.4	0.1	0.1	0.1

SCALE IN FEET 1:50

0 25' 50'

ENGINEERED DESIGN

For: Austin Stan Earthw

Date/Time: 7/20/2022 [illegible]

For in-to-reproduced or copies of that extend the [illegible] Agents (1) of Reg. 1.0.5. 32.1(d), 2010 Annual Supple

Rule Interpretation: [illegible]

Sub-D Ex-Income (pending)

EQUIPM

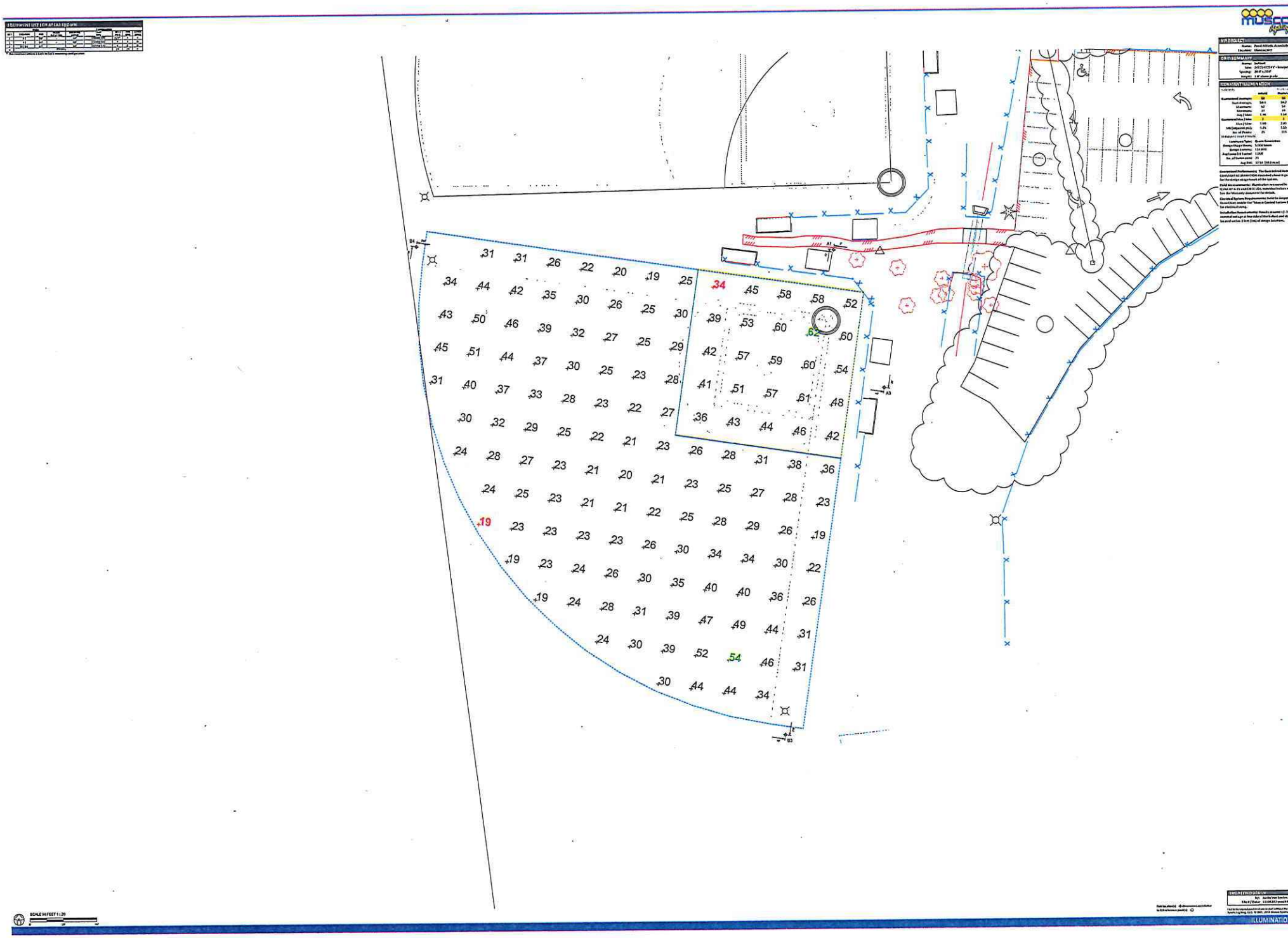
EQUIPMENT LIST FOR AREAS SHOWN
AIV PROJECT
GRID SUMMARY
CONSTANT ILLUMINATION
ILLUMINATIO

24 29 27 26 28 38
26 28 31 34 28 31 33 28
25 27 28 27 31 33 34 34 30
23 26 28 24 25 29 35 41 45 30
28 30 27 25 28 33 39 50 57 39
26 32 27 25 28 36 46 57 63 42
30 28 32 33 33 38 49 60 66 48
32 37 37 41 43 45 53 63 62 44
41 37 37 43 53 56 63 63 59 48
29 34 34 35 37 44 43 48 37
SCALE IN FEET 1:30

EQUIPMENT LIST FOR AREAS SHOWN

QTY	LOCATION	POLE	MOUNTING	LUMINAIRE	LAMP	LLD	LDD	LLF	WATTS
1	A1	14'			1 LED	1.0	1.0	1.0	30
2	A2, A3	14'			1 LED	1.0	1.0	1.0	30
3	B1, B2	14'			1 LED	1.0	1.0	1.0	30
4	C1, C2	14'			1 LED	1.0	1.0	1.0	30

* Line voltage ballasts & lens to be factory installed unless noted otherwise.

SCALE IN FEET 1:30

MY PROJECT

Name: Pond Artists Acres Ph
Location: Glenrose,SAT

GRID SUMMARY

Name: Property Self + 5' Add.
Spacing: 5.0'
Height: 5.0' above grade

CONSTANT ILLUMINATION

Results:

	Entire Grid
Scan Average:	1.0 fc
Maximum:	19.0 fc
Minimum:	0.0 fc
Max. of Avg.:	19.0

Luminaire Type: Green Generation
Product Life span Hours: 5,000 hours
Design Lumens: 1,11,0 lm
Avg Lamp Lifetime: 1,000
No. of Luminaires: 16
Avg kW: Tot 21 (90 G.mini)

Guaranteed Performance: The CONSTANT ILLUMI
structural clause is guaranteed for the design
usage hours of the system.

Field Measurements: Illumination measured in
ESMA RP-33-15 and CIESE 13.4. Individual values
See the Warranty document for details.

Electrical System Requirements: Refer to design
Check Chart and/or the "Master General Specifi
for electrical wiring.

Installation Requirements: Results assume UL-
nominal voltage at line side of the ballast and
lies rated within 2 feet (0.6m) of design luminaire.

Pole Inclination: ◎ dimensions are relative
to 0 (a horizontal pole)

ENGINEERED DRAWING

Rev: Sentio Vista Grea
File # / Date: 11164292 gen

This is the reproduced in whole or in part without
Sports Lighting LLC. Copyright, 2019 Musco Sp

ILLUMINAT

EQUIPMENT LIST FOR AREAS SHOWN

Pole					Luminaire			
Qty	Location	Type	Height (Nominal)	Type	Type	Watts	Lamps	Voltage
1	A1	30'	—	30'				
1	A2	30'	—	30'	Cooper GC	250	1	120
1	A3	30'	—	30'	Cooper GC	250	1	120
1	A4	30'	—	30'	Cooper GC	250	1	120
1	A5	30'	—	30'	Cooper GC	250	1	120
Total						1000	4	120

1. Pole elevation indicated is based on field measuring, verify prior to order.

MY PROJECT

Name: Pond Athletic Ar
Location: Clinton, MO

GRID SUMMARY

Name: Property Spill -
Spacing: 5.0'
Height: 5.0' above grad

CONTAMINATION

Statistics

	Entire Grid
Area (Acres):	2.476
Illuminance:	14.10
Uniformity:	8.00
No. of Points:	912

Symbol (1 in. = 0.0 ft)

Luminaire Type:	Cooper Gardco
Design Maintenance:	1.000 hours
Design Lumens:	114,000
Avg Lamp Life Lumens:	1.000
No. of Luminaires:	10
Avg Watt:	10.71 (0.0 in.)

Guaranteed Performance: The CONSTAR
described above is guaranteed for the de
major hours of the system.

Field Measurements: Upon completion
ASABE/IES RP-6-15 and CIBSE TM-5. Individual
See the Warranty document for details.

Electrical System Requirements: Refer t
Drawings/Cut sheet for the "Power Control
for electrical wiring.

Installation Requirements: Results are ba
nominal voltage at base side of the fixture
located within 1 foot (3 m) of design loca

SCALE IN FEET 1 : 50

ARCHITECT OF RECORD

Type: Architect
Firm / State: Firm Name

ILLUMI

Pole ID	Structural Item	Pole Location X	Pole Location Y	Light Sum Mounting Height	Outdoor NEMA Type	Number	Aiming Point X	Aiming Point Y	Aiming Point Z	Aiming Angle HAA	Aiming Angle VAA	Group
A1	Gridiron	-40.00	15.00	60.00	A	1	19.24	-23.70	0.00	6.48.1	34.34	A
					A	2	36.79	100.19	0.00	1.41.3	37.47	A
					A	3	56.77	31.00	0.00	0.5.1	23.02	A
					A	4	98.53	80.98	0.00	1.31.6	21.98	A
					A	5	-64.93	118.18	0.00	0.73.0	30.73	B
					A	6	-104.93	37.20	0.00	1.4.5	47.21	B
					A	7	-129.97	119.92	0.00	0.42.2	26.14	B
					A	8	-168.94	80.91	0.00	0.26.6	25.51	B
					A	9	108.59	32.77	0.00	0.42.4	32.73	A
A2	Baseball	35.00	-32.00	60.00	A	10	-15.63	2.48	0.00	1.31.6	44.88	A
					A	11	82.43	82.20	0.00	0.20.1	34.88	A
					A	12	15.15	27.83	0.00	1.9.4	37.47	A
					A	13	3.58	-15.05	0.00	0.46.9	42.36	B
					A	14	-1.14	83.30	0.00	1.53.6	-0.58	B
A3	Softball	-40.00	35.00	60.00	A	15	21.24	34.58	0.00	0.3.6	37.09	B
					A	16	50.41	40.52	0.00	1.17.9	27.47	B
					A	17	52.98	52.98	0.00	0.42.8	30.69	A
					A	18	79.58	201.36	0.00	1.36.3	31.46	A
B1	Baseball	-40.00	165.00	60.00	A	19	79.28	113.84	0.00	0.17.4	18.84	A
					A	20	115.01	314.91	0.00	1.17.3	19.58	A
					A	21	318.24	34.58	0.00	0.64.7	21.61	A
					A	22	39.47	211.98	0.00	1.61.3	25.60	A
					A	23	17.97	104.64	0.00	0.15.4	18.16	A
					A	24	103.94	107.81	0.00	0.34	19.38	A
					A	25	121.14	73.08	0.00	0.30.2	22.90	A
					A	26	258.34	48.18	0.00	1.53.3	23.14	A
B2	Baseball	165.00	-32.00	60.00	A	27	81.11	147.47	0.00	1.13.1	22.34	A
					A	28	140.71	101.39	0.00	1.23.1	21.19	A
					A	29	109.96	-4.91	0.00	0.50.2	19.01	A
					A	30	167.04	-9.52	0.00	1.14.6	22.99	A
					A	31	32.13	452.68	0.00	0.73.5	21.81	A
					A	32	108.53	83.87	0.00	1.24.6	21.98	B
					A	33	53.31	75.45	0.00	0.24.5	17.63	B
					A	34	52.15	100.35	0.00	1.19.2	17.44	B
B3	Softball	-10.00	210.00	60.00	A	35	134.32	60.37	0.00	0.16.0	17.44	B
					A	36	63.90	113.73	0.00	1.9.4	17.63	B
					A	37	139.47	11.53	0.00	0.37.0	18.48	B
					A	38	11.53	452.61	0.00	1.27.6	17.34	B
					A	39	180.16	154.74	0.00	0.5.4	18.91	B
					A	40	107.13	154.73	0.00	1.13.9	17.15	B
					A	41	147.80	154.80	0.00	0.13.0	17.08	B
					A	42	107.13	20.51	0.00	1.29.4	18.53	B
B4	Softball	210.00	-10.00	60.00	A	43	77.99	130.30	0.00	0.12.8	18.97	B
					A	44	153.34	121.64	0.00	1.4.0	17.57	B
					A	45	117.34	163.68	0.00	0.27.7	18.14	B
					A	46	170.45	2.57	0.00	1.34.7	18.44	B
					A	47	74.74	141.23	0.00	0.9.3	17.91	B
					A	48	142.56	40.47	0.00	1.19.0	17.23	B
					A	49	81.81	211.98	0.00	0.60.3	20.84	A
					A	50	4.37	210.98	0.00	1.50.0	25.21	A
C1	Baseball	105.00	243.00	60.00	A	51	210.98	153.19	0.00	0.15.5	22.41	A
					A	52	-20.98	171.51	0.00	1.43.7	24.95	A
					A	53	184.27	130.23	0.00	1.29.7	31.44	A
					A	54	132.93	202.04	0.00	0.44.7	27.53	A
					A	55	217.43	-2.41	0.00	1.50.4	29.23	A
					A	56	250.38	143.33	0.00	0.42.3	22.91	A
C2	Baseball	243.00	105.00	60.00	A	57	194.42	84.07	0.00	1.6.5	25.60	A
					A	58	143.84	119.63	0.00	0.18.1	23.58	A
					A	59	143.81					

muscoLight

MATRIX

Project: Pond-ASG-Fb-Alone
Location: Conway,MO

Area Summary	
Zone1	
Zone2	
Zone3	

ENGINEERED DESIGN

Site / Date: 11/04/2022

Visit the Musco website for current and archive

Musco Lighting LLC ©1997, 2010 Musco

AIM

C. CONTROLS AND MONITORING

Control System Summary

Project Information

Project #:	111042
Project Name:	Pond Athletic Association Softball
Date:	09/30/16
Project Engineer:	J Van Soelen
Sales Representative:	Todd Stych
Control System Type:	Control and Monitoring
Communication Type:	Digital Cellular
Scan:	111042R2-prod
Document ID:	111042P1V2-0930092105
Distribution Panel Location or ID:	BB & SB
Total # of Distribution Panel Locations for Project:	1
Design Voltage/Hertz/Phase:	240/60/1
Control Voltage:	120

Equipment Listing

DESCRIPTION	APPROXIMATE SIZE
1.Control and Monitoring Cabinet	24 X 72

	QTY	SIZE
Total Contactors	4	30 AMP
Total Contactors	6	60 AMP
Total Off/On/Auto Switches:	2	

Project Specific Notes:

Materials Checklist

Contractor/Customer Supplied:

- ❑ A single control circuit must be supplied per distribution panel location.
  - — If the control voltage is NOT available, a control transformer is required.
- ❑ Electrical distribution panel to provide overcurrent protection for circuits
  - — Thermal/Magnetic circuit breaker sized per full load amps on Circuit Summary by Zone Chart
- ❑ Wiring:
  - — Dedicated control power circuit
  - — Power circuit to and from lighting contactors
  - — Harnesses for cabinets at remote locations
  - — Means of grounding, including lightning ground protection
- ❑ Electrical conduit wireway system
  - — Entrance hubs rated NEMA 4: must be die-cast zinc, PVC, or copper-free die-cast aluminum
- ❑ Mounting hardware for cabinets
- ❑ Control circuit lock-on device to prevent unauthorized power interruption to control power
- ❑ Anti-corrosion compound to apply to ends of wire, if necessary

Call Control-Link Central ™ operations center at 877/347-3319 to schedule activation of the control system upon completion of the installation. Note: Activation may take up to 1 1/2 hours

IMPORTANT NOTES

1. Please confirm that the design voltage listed above is accurate for this facility. Design voltage/phase is defined as the voltage/phase being connected and utilized at each lighting pole's ballast enclosure disconnect. Inaccurate design voltage/phase can result in additional costs and delays. Contact your Musco sales representative to confirm this item.
2. In a 3 phase design, all 3 phases are to be run to each pole. When a 3 phase design is used Musco's single phase luminaires come pre-wired to utilize all 3 phases across the entire facility.
3. One contactor is required for each pole. When a pole has multiple circuits, one contactor is required for each circuit. All contactors are UL 100% rated for the published continuous load. All contactors are 3 pole.
4. If the lighting system will be fed from more than one distribution location, additional equipment may be required. Contact your Musco sales representative.
5. A single control circuit must be supplied per control system.
6. Size overcurrent devices using the full load amps column of the Circuit Summary By Zone chart- Minimum power factor is 0.9.

NOTE: Refer to Installation Instructions for more details on equipment information and the installation requirements

©1999,2016 Musco Sports Lighting,LLC

Control•Link® Control and Monitoring System

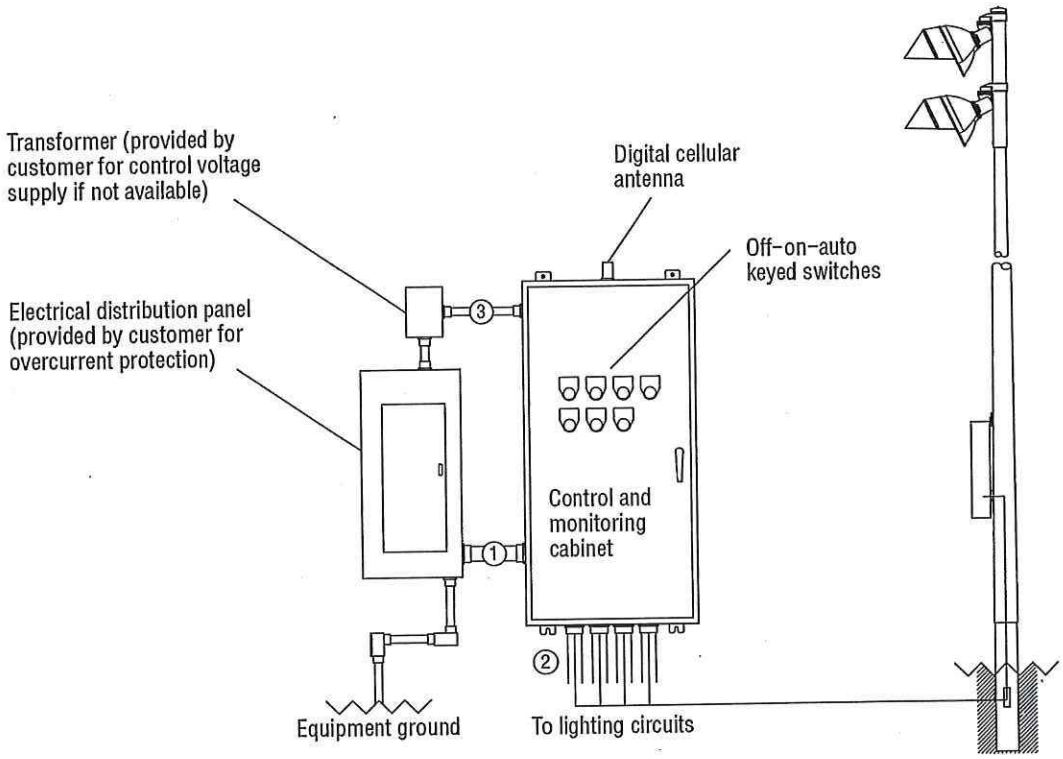

Wire	Description	# of Wires	Typ. Wire Size (AWG)	Max. Wire Length (FT)	Wire from Musco	Notes
1	Line power to contactors, and equipment grounding conductor	Note A	Note B	27	No	A – E
2	Load power to lighting circuits	Note A	Note B	N/A	No	A – D
3	Control power (dedicated, 20A)	3	12	N/A	No	C, D

R60-32-00_C

Notes:
A. Voltage and phasing per the notes on cover page.
B. Calculate per load and voltage drop.
C. All conduit diameters should be per code.
D. Refer to control and monitoring system installation instructions for more details on equipment information and the installation requirements.
E. Contact Musco if maximum wire length from circuit breaker to contactor exceeds value in chart.

IMPORTANT: Control (3) wires must be in separate conduit from line and load power wiring (1, 2).

1. What affects the cost of lighting my ball field?

Many people don't realize the cost of light fixtures is only a small part of the overall project cost. When comparing proposals, it is important to look at both the initial and operating (or life-cycle) costs. *(See pages 6 and 7 for more information on operating costs.)*

Initial costs for a complete project will include three components:

- Lighting
- Structural
- Electrical

For each of these three components you will need to select someone to:

- Design
- Supply
- Install

Decisions you make on one component affect the others. For example, due to variances in fixture efficiency, some manufacturers may require more light fixtures, which means you may need larger poles to support the additional wind load and additional electrical components to operate the system.

9 Important Sports-Lighting Decisions

	Lighting	Structural	Electrical
Design	?	?	?
Supply	?	?	?
Install	?	?	?

This matrix is an easy way to see at a glance if you've covered all areas of your project in developing cost estimates.

Musco provides

- Free project planning assistance and budget estimates
- Complete systems engineered for fast, cost-saving installation
- Energy efficient systems that save 50% in operating costs over the life of the system
- Ways to reduce your total project costs by up to ⅓ with volunteer-assisted installation
- Fundraising and financing programs

In addition to the nine important sports-lighting decisions, several variables affect the design and final cost of your project. The following is a checklist of the major items that will need to be reviewed with your local sports-lighting representative and incorporated into your lighting system design.

Quantity and quality of light

- ❑ Facility type
- ❑ Players' skill level
- ❑ Facility size
- ❑ Spectator capacity
- ❑ Television/video requirements
- ❑ Required or recommended lighting standards (for organizations such as Little League Baseball® and Softball or Amateur Softball Association)

Geographical issues

- ❑ Location — affects structural codes and local/state building codes
- ❑ Soil conditions
- ❑ Existing structures
- ❑ Pole setback requirements

Environmental light control issues

- ❑ Proximity of neighbors
- ❑ Community light ordinances
- ❑ Nearby airport or observatory ordinances
- ❑ Multifield complexes

2. How many lights do I need?

It is a common practice to specify a number of fixtures, rather than the amount of light produced on the field. However, this is like buying a car based on the size of its gas tank rather than its fuel efficiency. The efficiency of reflector systems currently available varies significantly. What you are buying is the quantity and quality of light on the field.

Quantity of light

Light on a playing surface is measured in footcandles. There are several factors that determine the number of footcandles required to light your field:

1. **Sport type** — More light is required to light smaller, faster moving objects. For example, baseball uses a small ball traveling at high speeds and, therefore, requires a higher light level than soccer.
2. **Players' skill level** — Higher light levels are needed for increased skill and accuracy.
3. **Field size** — Defines the number of square feet to be lighted.
4. **Spectator capacity** — More light is needed to see action that is farther away.
5. **Television/video requirements (if any)** — A camera interprets images more slowly than the human eye and requires more light to be able to follow the action.

Generally Accepted Lighting Standards

	LIGHT LEVELS			
	FOOTCANDLES		LUX	
	Target[1]/ Constant	Initial	Target[1]/ Constant	Initial
Baseball/Softball				
Recreational	30/20	43/29	323/215	462/308
Schools/Amateur Leagues	50/30	71/43	538/323	768/462
Little League Baseball®	50/30	71/43	538/323	768/462
Amateur Softball Association (ASA)	50/30	71/43	538/323	768/462
College[2]	100/70	143/100	1076/753	1538/1076
Basketball (indoor)				
Elementary	30	43	323	462
High School	50	71	538	768
College[2]	80	114	861	1230
Football				
Schools/Amateur Leagues	30	43	323	462
College[2]	50	71	538	768
Soccer				
Schools/Amateur Leagues	30	43	323	462
College/Municipal[2]	50	71	538	768
Tennis - 2 court (side by side)				
Recreational	30	43	323	462
Schools/Amateur Leagues	50	71	538	768
College[2]	75	107	807	1152

[1] .7 light loss factor used to determine target light levels on field for extended life of lighting system.
[2] May vary due to seating capacity and television requirements.

Light levels naturally depreciate over time as lamps age. New technology offsets this, but it is important to make sure your system is designed to provide maintained, or target, footcandles to ensure you have enough light over the life of your lighting system.

Lighting terms you'll hear

Lumen — A measure of light, much like a mile is a measure of distance.

Footcandle — One lumen of light spread over one square-foot of surface. In other words, a light level of 30 footcandles means that 30 lumens of light are being projected onto each square foot of playing surface.

Initial footcandles — The amount of light on the field when the lighting system is first put into use.

Target footcandles — The lowest average amount of light for which a lighting system should operate over its extended life to ensure performance requirements.

Constant light levels — The amount of light you can expect on the field at any given time over the extended life of the system.

Uniformity — The smoothness of light on the field.

Photometrics — The reflector is the photometric unit of a lighting system. It provides a mechanical redirection of light.

High intensity discharge lamp (HID) — A group of lamps consisting of metal halide, mercury, and high pressure sodium.

Light loss factor — A factor used to calculate the level of light after a given period of time. Accounts for lamp depreciation, dirt accumulation, temperature and voltage variations, and maintenance procedures.

Point-by-point — A computer-generated model of your proposed lighting system showing footcandle readings at given points on your field.

Quality of light

When talking about quality of light on the field, you'll hear the term uniformity, or evenness, of light on the field. It is stated as a ratio, like 3:1, the minimum standard for most sports.

What it means: the brightest point on the field should be no more than three times the darkest point. Why is that important? Balls appear to change speeds if they pass from dark to light areas, making it difficult to follow the flight and gauge the speed of the ball.

Each manufacturer should provide specific information on initial and maintained light levels as well as a uniformity ratio, so when you compare proposals you can be sure they're all designed to the same criteria.

It's also a good idea to get written guarantees for both the quantity and quality of light your system will provide.

Musco provides

- Free lighting design services to you or your consultant
- Guaranteed constant light levels

3. What will it cost to operate my lighting system?

Several issues affect the operating cost of a lighting system. In addition to the electrical cost of lighting your field, you should consider management and staff time for operating the on/off schedules and tracking facility usage. Routine maintenance and unexpected repair costs can rack up if your system is not well designed from an electrical and structural standpoint.

Electrical consumption

Differences in reflector system efficiencies and aiming design can vary, meaning one manufacturer may require fewer fixtures to achieve the same amount of light on the field. Over the life of the system you'll save money on electrical costs with fewer fixtures, and you'll save on lamp replacement and other maintenance costs.

In the example, Manufacturer A saves $41,500 in energy cost over the life of the system.

300-foot Radius Baseball Field (1500-watt metal halide lamps)

Manufacturer A – 32 fixtures		Manufacturer B – 52 fixtures
32 fixtures	Number of fixtures required	52 fixtures
x $.14*	Hourly cost per fixture	x $.15*
$4.48	Hourly energy cost	$7.80
x 500 hours	Hours operated per year	x 500 hours
$2,240	Annual energy cost	$3,900
x 25 years	Life of system	x 25 years
$56,000	**Life-cycle energy cost**	**$97,500**

* Assuming a 9¢ kWh electrical rate, Manufacturer A uses an average of 1.564 kW per fixture, and Manufacturer B uses an average of 1.62 kW per fixture.

Efficient management and scheduling

As public concern over energy conservation grows, many cities and organizations are implementing automated lighting control systems to turn their lights on and off. The automated systems are more reliable than timers and better at accommodating last minute changes or rainouts. Also, operating lights only when needed will save substantial energy dollars over time, especially for multiple fields.

In addition to the energy savings, automated control systems can save your staff traveling to and from the ballparks every night to turn lights on and off. Some systems provide advance weekly planning and management reports that track hours by user, helping you set user fees that offset your operating expenses.

Musco's Control-Link® automated control system

- Saves energy and staff costs
- Allows flexible control
- Improves management tools
- Increases security
- Provides reliable operation

Routine maintenance

Relamping — It's more efficient to "group" relamp rather than replace lamps as they burn out. We recommend group relamping prior to the end of the rated lamp life.

Costs include:

- Lamps ($60 – $70/lamp average)
- Equipment rental to get to top of pole ($60 – $125/hour)
- Labor (Approximately $40 / hour average)

Fuses — Replace as needed (average cost $1 – $5 / fuse). Unless fuses are accessible at ground level, you may also need to rent equipment to get to the top of the pole (see above).

Repair and unexpected costs — how to avoid them

These costs may be overlooked during the initial purchase of a lighting system, but can take significant time and money to correct later. A well-designed system will be durable enough to withstand the elements and have features designed to reduce labor costs.

Re-aiming — Make sure your manufacturer guarantees fixture alignment. Over time, several factors, including the weather, can cause misalignment resulting in less light on the field. Labor and equipment costs to correct this can be significant.

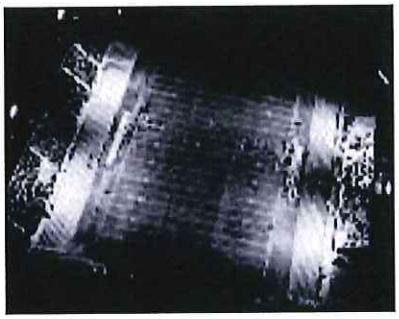

Misalignment of as little as 10 degrees shifts light off the playing field into the stands.

Multiple fixture outages — Each fixture should be individually fused. This lessens the chance of a multiple or "gang" failure and also the need for emergency repairs.

Troubleshooting — Easy-to-access systems are designed so the major electrical components — ballasts, capacitors, and fuses — are located close to the ground, saving time and money.

Musco Constant 25™, a comprehensive foundation-to-poletop warranty and maintenance program, covers 100% of your maintenance costs, including parts and labor, for the next 25 years.

Musco Constant 25 **includes**

- Guaranteed constant light levels
- Group lamp replacements
- System monitoring
- Routine maintenance and on/off control services

Having major electrical components accessible at ground level avoids hiring a $100 crane to replace a $1 fuse.

4. If they use the same wattage bulb, aren't all fixtures the same?

All 1500-watt metal halide bulbs produce about the same amount of light (155,000 lumens). However, without a reflector, a 1500-watt metal halide bulb produces less than one footcandle of light on an area 100 feet away.

The manufacturer's reflector design is the critical factor in how effectively the lamp's light energy is projected onto the playing surface. New technology allows previously wasted spill light to be redirected back onto the playing surface, increasing the light on the field.

1500-watt metal halide bulb with no reflector

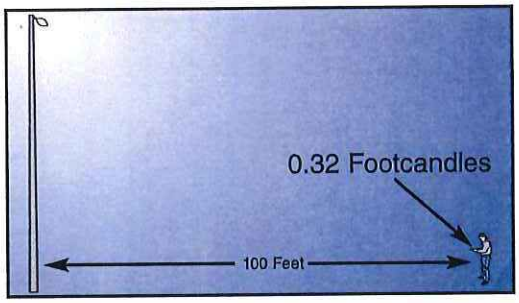

1500-watt metal halide bulb with reflector

A reflector concentrates and projects the light energy onto the playing surface.

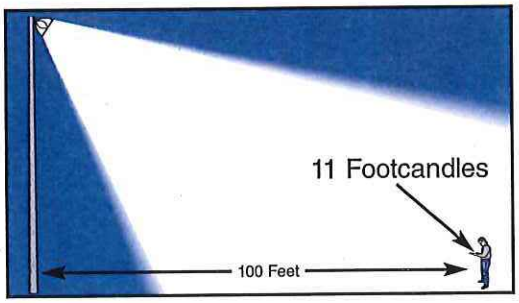

It is a common mistake to specify a number of fixtures, rather than the quantity of light produced on the field. Specifying a set number of fixtures simply spells out the amount of light that is going to be generated by the lamp at the top of the pole, rather than the light on the field.

Musco's Technology

- Provides more light per fixture on the playing surface — fewer fixtures to buy, install, operate, and maintain
- Reduces spill light and glare off-field by 50%; reduces fixture glare for players
- Ensures guaranteed Constant Light™ for the safety and performance of players without wasting energy
- Offers complete foundation-to-poletop lighting system

Fixtures may be purchased as a system or as single fixtures. Here's an analysis:

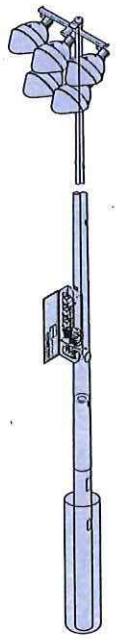

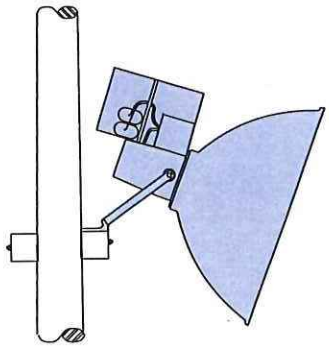

Shaded areas indicate engineered components

System	Single Fixture
Engineered as a total system ▪ Parts selected by trained engineers for system compatibility ▪ Critical components assembled in controlled environment ▪ Tested prior to shipment ▪ Single source accountability with warranty on entire system	**Parts and pieces of unknown strengths put together by the installer** ▪ Inconsistent warranties from several sources
Factory aimed ▪ Reduced installation cost ▪ Known results	**Individual fixture-by-fixture aiming from the top of the pole** ▪ Adds installation cost ▪ Unknown results
40+ pound ballast mounted at base of pole ▪ Easier maintenance ▪ Weight reduction assures fixture alignment	**40+ pound ballast mounted on fixture** ▪ Troubleshooting must be done from top of pole ▪ Increases chance of misalignment

5. Our local utility company has offered to donate wood poles. How will these work on my field?

While it's tempting to use wood poles, you'll find any initial savings are quickly eaten up in repairs and re-aiming fixtures. Here are some of the problems we've observed on facilities that used wood poles.

Improper mounting heights

In general, wood poles that are donated are not tall enough to allow for proper mounting heights required for sports lighting. Poles that are too short cause glare for players and spotty lighting on the field.

Fixture misalignment

Twisting poles — As wood poles dry in the sun, they naturally twist. Today's lighting systems are aimed to ½° accuracy, but wood poles commonly twist 15° – 20° in either direction. Re-aiming fixtures is a costly maintenance chore that can be avoided.

Leaning poles — Wind load created by the fixtures at the top of the pole make a standard utility embedment (10% plus 2 feet) inappropriate for a sports-lighting application. As a result, your poles may begin to lean, misaligning your fixtures.

Safety hazards

Twisting poles — Because electrical conduit must be run on the outside of the pole, twisting of a wood pole can result in exposed wiring.

Rotting wood — The center of treated wood poles are the most susceptible to deterioration, which means you may unknowingly have a pole that is in danger of failing.

Woodpeckers — Woodpeckers can create large holes in wood poles, making them structurally unsafe. (It sounds funny, but it does happen!)

Toxic preservatives — Effective wood preservatives are made from a variety of materials inappropriate for use in areas of high activity.

Twisting of this pole caused electrical conduit to separate, exposing wiring.

Other common pole types are concrete and steel

Pole Type	Benefits	Drawbacks
Concrete	▪ Can be direct buried eliminating the cost of elaborate footings ▪ Corrosion and moisture resistant ▪ Pleasing appearance	▪ Poles are heavier and more expensive to set ▪ High freight costs often limit their use to areas near concrete pole manufacturing plants
Base-plate Galvanized Steel	▪ Pleasing appearance ▪ Lightweight, easy to handle	▪ Higher initial cost ▪ Require construction of concrete foundations with anchor bolts on which poles are mounted ▪ Curing time of concrete base ▪ Corrosion at ground level ▪ Difficulty with pole orientation
Direct Burial Galvanized Steel Pole	▪ Pleasing appearance ▪ Lightweight	▪ Underground corrosion accelerated due to moisture and soil chemicals — often undetectable prior to pole failure ▪ Increased installation time and cost depending on structural engineer's criteria

Combination concrete and steel pole

This pole option combines the advantages of steel and concrete, while reducing or eliminating many of the problems. Steel pole shafts are slip-fit onto precast concrete bases that are set directly into the ground and backfilled with concrete.

Benefits

- **Installation ease** — Poles can normally be set onto pre-stressed, direct-buried bases within 24 hours, eliminating the up to 28-day cure time and extra expense for designing and fabricating on-site built foundations.
- **Cost savings** — Poles and bases are shipped in sections, lightweight and easier to handle for lower freight costs and faster installation.
- **Corrosion resistance** — Concrete bases provide maximum corrosion and moisture resistance at ground level and below grade; galvanized steel poles kept above accelerated corrosion zone (two feet above and below ground).

Musco's Light-Structure Green™
Combines the benefits of both concrete and steel poles — reduces installation costs and time

6. There are no houses near my field, so why should I be concerned about spill light and glare?

Even if there aren't any houses there now, controlling spill light and glare is important for several reasons:

- Spill light is wasted energy
- Spill light and glare control technology will improve the quality of light on the field for players and spectators
- Communities often "grow-up" around recreational facilities
- Communities are becoming increasingly concerned about environmental light control and energy consumption

Spill light = wasted energy

Prior generation, standard symmetrical reflectors actually waste light. Light control technology redirects wasted spill light back onto the playing surface, increasing light on the field.

By better controlling the light from each fixture, you reduce the number of fixtures needed to get the required amount of light on the field. This, in turn, reduces the electrical cost to operate and maintain the lighting system.

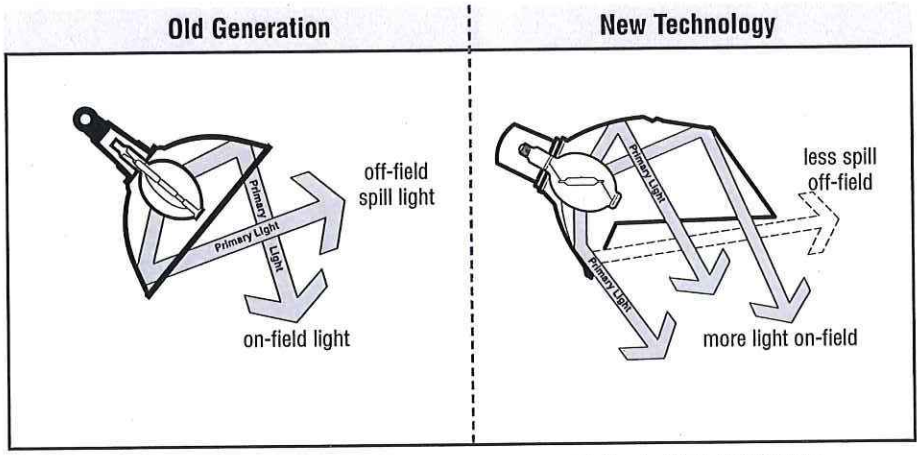

Standard Symmetrical Reflector

Redirects Off-Field Spill Light

Glare problems

Glare control is not only important for off-site locations, it is also critical to player safety and spectator enjoyment. Glare from fixtures can make it difficult for players to follow the ball, creating the possibility for injury.

Players competing on multifield complexes can also be affected by glare from adjacent fields.

Old Generation Standard Symmetrical Reflector

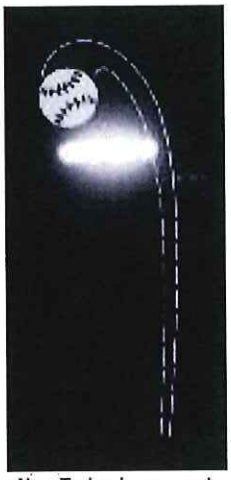

New Technology — gets the glare out of players' eyes

Community growth

Often communities "grow up" around sports facilities. The fact that the facilities and the lights were there first doesn't stop the new neighbors' complaints when lights are shining into their living rooms. Your lighting system should last over 20 years, plenty of time for growth to become an issue in many communities.

Growing concern

We're all aware of the growing public concern for wasting the valuable energy resources it takes to produce light. Many communities are also enacting environmental light pollution ordinances to regulate bothersome light that shines on private property, through windows, onto roadways, and around astronomical research facilities.

Musco's Technology
Musco has developed advanced spill light and glare control systems to solve serious environmental concerns.

7. How can I make sure I get the results I want?

We've reviewed some of the issues involved in choosing the sports-lighting system that will meet your needs. Once you've made your decision, there are ways to ensure you get the results you want:

Define standards

It is important to have written specifications that establish the performance that you want from your system.

When defining specifications, remember to incorporate the three components of a lighting system: lighting, structural, and electrical. Take into account the costs involved for the design, supply, installation, and operation of the entire system. Specify the values you want for playability, environmental light control, life-cycle cost savings, and warranty.

Clear cut standards avoid two problems on bid date:

- Insufficient, cheap equipment substitutions to lower bid price
- High bids to cover the uncertain costs of an under-defined project

Seek accountability

Having a manufacturer that stands behind their product and provides good service will make a huge difference in long-term satisfaction with your lighting system:

Get a written guarantee — Manufacturers can provide written performance guarantees that your entire system — from the foundation to the light fixtures — will meet the specifications you established. Getting this guarantee from a single source that provides your entire system can save you the headache of sorting out responsibility among multiple manufacturers should a problem arise.

Compare warranties — The warranty reflects a manufacturer's confidence in their product. Some manufacturer warranties include routine maintenance and provide longer coverage based on their confidence in their product's performance.

Evaluate their reputation for service — Ask for project references and review the manufacturer's track record for service. Find out if there will be an on-site field performance evaluation after the installation.

Musco Lighting

- Provides local representatives to assist you in developing written specifications to ensure the performance of your sports-lighting system
- Offers an industry-leading 25-year product assurance warranty and maintenance program
- Provides dedicated warranty and field services personnel

We'll help get you started.

Whatever the size of your project, Musco provides the same quality equipment and expert engineering. Our technology provides unequaled performance:

- Reduces energy and life-cycle costs by 50%
- Eliminates 100% of maintenance for 25 years
- Cuts wasted spill light by 50%
- Provides constant light levels
- Control·Link® provides system monitoring, management tools, and on/off control

For free planning assistance for your sports-lighting project contact

MUSCO Lighting

We Make It Happen.®

800/825-6030
www.musco.com
e-mail: lighting@musco.com

Notes

Bonus Information

Funding options to help make your project happen

Finding available funds is often the most challenging part of the buying process. There are options available that can make your lighting project doable.

Utility grants/rebates

Many utility companies offer incentives to promote the use of energy efficient products including athletic field lighting. Incentives vary and come in the form of rebates, grants, low-interest loans, or reduced kilowatt rates. Once the utility company completes an energy savings audit, they can help fund new lights or upgrade your existing lighting equipment with an energy-efficient system.

Financing Programs

Financing programs for municipalities and public school systems provide a "budget stretcher" to help with facility improvements such as sports lighting and other equipment. The added revenue from expanded use of your facility can help make the annual payments, allowing you to enjoy the benefits of lighted facilities sooner. Plus, a set payment can be built into your annual budget, freeing you from budget uncertainties and lowering the cash flow impact of a large purchase.

Unique Fundraising

Musco's unique Pennant Program™ provides corporate advertising opportunities using pennants displayed on Musco's Light-Structure Green™ systems. Many organizations have used this program to totally finance their project or to complement other fundraising efforts. Others have continued the program after the initial purchase to help with annual operating costs.

Volunteer Installation

Reducing installation time can save significant total project costs. Buying the components from one manufacturer as a complete, compatible system makes installation simpler, saving time and money. Plus, systems suitable for volunteer installation can save up to one-third of the total project costs.

Musco Lighting

- Has a resource database to help identify recreation, utility, and community foundation incentive programs available in your area
- Meets utility companies' eligibility requirements with its Light-Structure Green™ and Control-Link® energy and life-cycle cost savings
- Offers flexible, affordable financing programs for qualified applicants
- Provides Pennant Program™ material and other fundraising tips
- Offers a lighting system that makes volunteer installation possible

www.musco.com

We Make It Happen.

800/825-6030
www.musco.com
e-mail: lighting@musco.com

100 1st Avenue West / PO Box 808
Oskaloosa, Iowa 52577
641/673-0411 • Fax: 641/672-1996

©1996, 2009 Musco Lighting · E-100-12

Control System Summary

SWITCHING SCHEDULE

Field/Zone Description	Zones
Baseball-Pond	1
Softball-Pond	2

CONTROL POWER CONSUMPTION	
120V Single Phase	
VA loading of Musco Supplied Equipment	INRUSH: 3038.0
	SEALED: 350.8

BALLAST SPECIFICATIONS .90 Minimum Power Factor	VOLTAGE: 240v			SINGLE PHASE			
BALLAST OPERATING VOLTAGE	208	220	240	277	347	380	480
1500 Watt Metal Halide Lamp Operating line amperage per fixture- maximum	8.6	8.3	7.5	6.5	5.1	4.7	3.7
1000 Watt Metal Halide Lamp Operating line amperage per fixture- maximum	6.5	6.4	5.8	4.9	4.0	3.6	2.9

CIRCUIT SUMMARY BY ZONE

POLE	CIRCUIT DESCRIPTION	# OF FIXTURES	FULL LOAD AMPS	CONTACTOR SIZE (AMPS)	CONTACTOR ID	ZONE
A1	Baseball-Pond	4	**30.0**	30	C1	1
A2	Baseball-Pond	4	**30.0**	30	C2	1
B1	Baseball-Pond	8	**60.0**	60	C3	1
B2	Baseball-Pond	8	**60.0**	60	C4	1
C1	Baseball-Pond	5	**37.5**	60	C5	1
C2	Baseball-Pond	5	**37.5**	60	C6	1
A1	Softball-Pond	4	**30.0**	30	C7	2
A3	Softball-Pond	4	**30.0**	30	C8	2
B3	Softball-Pond	8	**60.0**	60	C9	2
B4	Softball-Pond	8	**60.0**	60	C10	2

Control System Summary

PANEL SUMMARY

CABINET #	CONTROL MODULE LOCATION	CONTACTOR ID	CIRCUIT DESCRIPTION	FULL LOAD AMPS	DISTRIBUTION PANEL ID (BY OTHERS)	CIRCUIT BREAKER POSITION (BY OTHERS)
1	1	C1	Pole A1	30.00		
1	1	C2	Pole A2	30.00		
1	1	C3	Pole B1	60.00		
1	1	C4	Pole B2	60.00		
1	1	C5	Pole C1	37.50		
1	1	C6	Pole C2	37.50		
1	1	C7	Pole A1	30.00		
1	1	C8	Pole A3	30.00		
1	1	C9	Pole B3	60.00		
1	1	C10	Pole B4	60.00		

ZONE SCHEDULE

			CIRCUIT DESCRIPTION	
ZONE	SELECTOR SWITCH	ZONE DESCRIPTION	POLE ID	CONTACTOR ID
Zone 1	1	Baseball-Pond	A1 A2 B1 B2 C1 C2	C1 C2 C3 C4 C5 C6
Zone 2	2	Softball-Pond	A1 A3 B3 B4	C7 C8 C9 C10

Datasheet: **Control-Link® Control and Monitoring System**

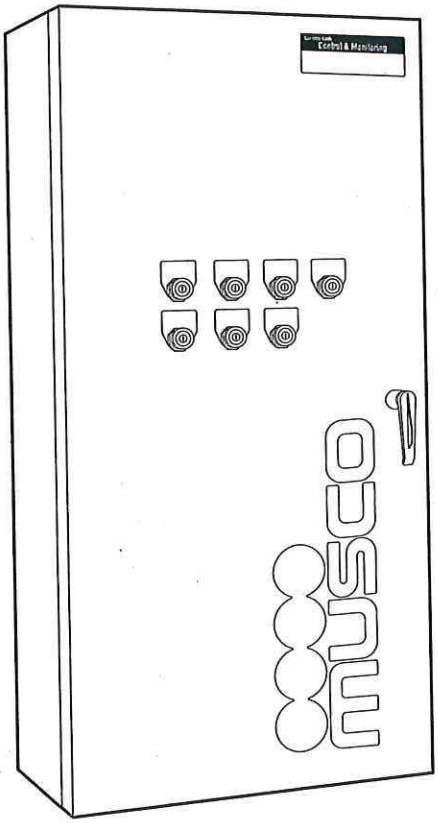

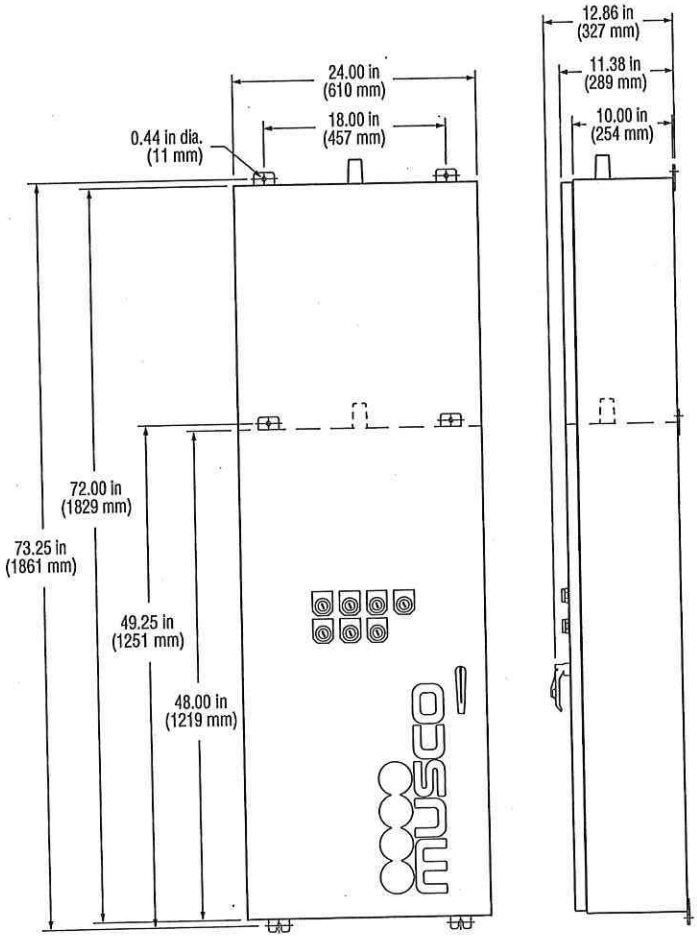

Overview

Control-Link® control and monitoring system provides flexible remote on/off control, monitoring, and management of your lighting system.

Features

Control

- Lighting system and auxiliary equipment
- Customized on/off control via phone, website, smartphone application, email, or fax up to 10 years in advance
- Multi-level user security settings
- Key-activated on/off/auto switches allow manual or automated control
- Seven controllable lighting zones

Monitoring

- Detects lamp outages and other issues that affect light quality

Management and Support

- Control-Link Central™ service center provides support 24 hours a day, 7 days a week for scheduling, monitoring, and reporting
- Luminaire outage notification within the next business day
- Customized usage reports through website

Technical Specifications

Ratings

UL 508A Listed E204954

FCC Part 15 ..... Class A compliant

Operating temperature ..... -4 °F to 140 °F (-20 °C to 60 °C)

Weight for 72 inch (1829 mm) cabinet ..... 180 lb (82 kg)

Weight for 48 inch (1219 mm) cabinet ..... 140 lb (64 kg)

Short Circuit Current Rating (SCCR)

with 30 A contactors* ..... 18 kA

with 60 or 100 A contactors* ..... 25 kA

*Minimum circuit breaker interrupt rating must be greater than or equal to SCCR rating listed above.

©2012, 2013 Musco Sports Lighting, LLC · Control-Link® is a registered trademark of Musco Corporation in the United States. U.S. patents issued and pending. · M-1136-enUS-3

Datasheet: **Control-Link® Control and Monitoring System**

Technical Specifications

Construction

- NEMA type 4 cabinet
- Powder-coated aluminum 5052 H32 cabinet and panel
- Lockable, 3-point latch
- Supports lighting system voltage up to 480 V
- Requires 120 V phase-to-neutral control voltage
- Protective cover isolates high voltage

Internal Details

- Factory wired, programmed, and tested
- Internally fused
- Control power terminal blocks provided
- One control circuit operates entire cabinet
- Plug-in wire harnesses provided to connect multiple cabinets

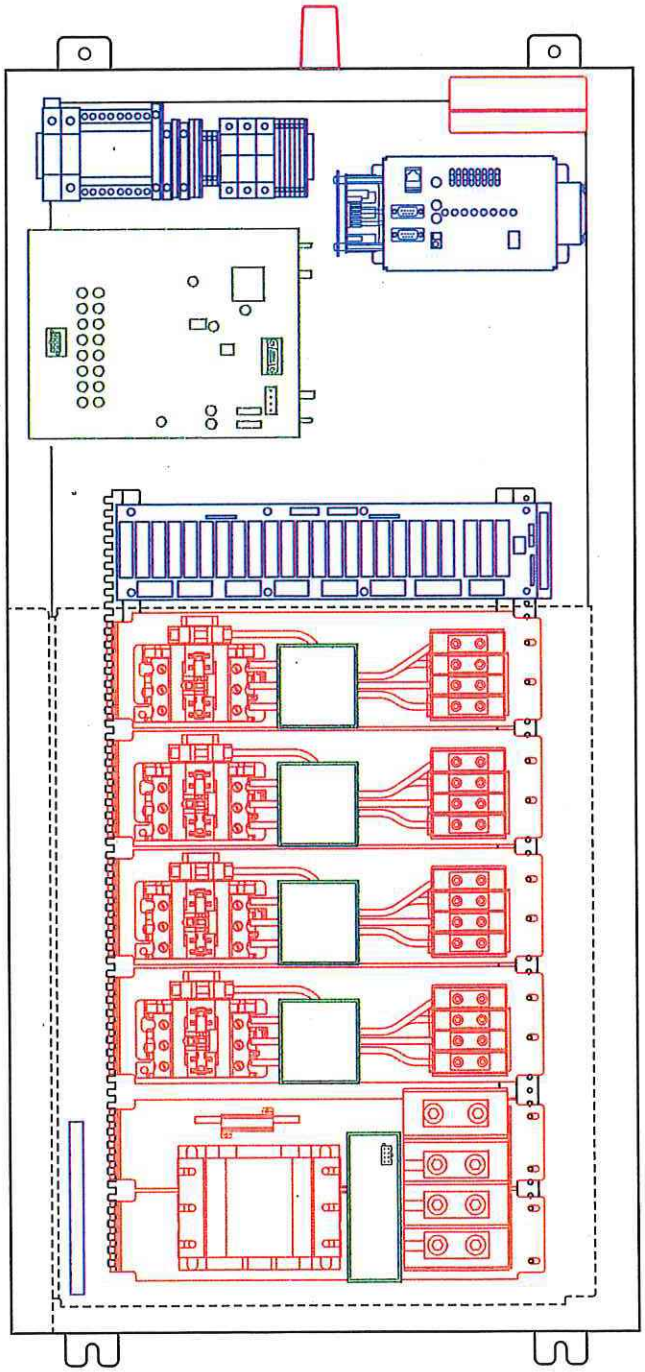

Control Module

Receives and stores schedules from Control-Link Central™ service center, operates your equipment, and verifies schedules were carried out.

- Stores and executes schedules for up to 7 days
- Reboots automatically and executes current schedule when power is restored, in case of power interruption

Monitoring Modules

Monitors Musco lighting system and reports issues to keep facilities operating and to help plan routine maintenance. Alerts Control-Link Central service center to schedule appropriate action or maintenance.

Communication Module

Integrated communication system providing two-way reliable, high speed communication to Control-Link Central service center with no additional monthly charges during warranty period.

Contactor Modules

Switches equipment based on control module schedules.

- Tested and UL-listed for continuous operation at 100% of rated current
- Contactors rated for 30, 60, or 100 A

Ground Bar

Provides integral ground bar for lighting equipment grounding.

©2012, 2013 Musco Sports Lighting, LLC · Control-Link® is a registered trademark of Musco Corporation in the United States. U.S. patents issued and pending. · M-1136-enUS-3

D. STRUCTURAL INFORMATION

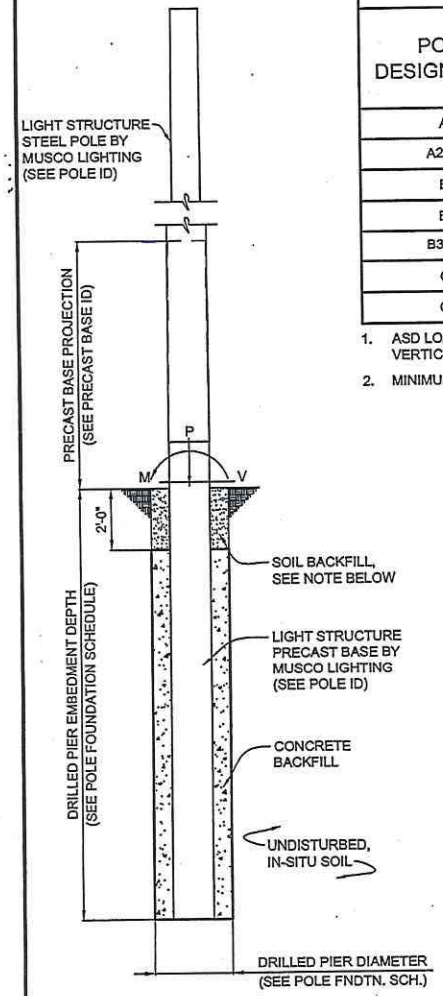

POLE FOUNDATION ELEV.

SCALE: NOT TO SCALE

SOIL BACKFILL NOTE:
THE TOP TWO FEET OF ANNULUS SHALL BE BACKFILLED WITH SOIL, WITH A CLASSIFICATION OF CLASS 5 (TABLE 1806.2) OR BETTER. COMPACTION, 95% FOR COHESIVE SOIL AND 98% FOR A COHESIONLESS SOIL BASED UPON STANDARD PROCTOR TESTING (ASTM D698).

POLE FOUNDATION SCHEDULE

POLE DESIGNATION	FORCES (1.)			DRILLED PIER		
	MOMENT (M) FT-LBS	SHEAR (V) LBS	VERTICAL (P) LBS	DIAMETER INCHES	EMBEDMENT DEPTH	CONCRETE BACKFILL YD^3 (2.)
A1	48,433	1,159	1,727	30	12'-0"	1.5
A2, A3	35,159	894	1,179	30	10'-0"	1.3
B1	53,582	1,253	1,727	30	12'-0"	1.5
B2	52,403	1,234	1,727	30	12'-0"	1.5
B3, B4	58,299	1,330	1,727	30	12'-0"	1.5
C1	39,032	957	1,269	30	10'-0"	1.3
C2	39,799	969	1,269	30	10'-0"	1.3

1. ASD LOAD COMBINATION D + 0.6W
   VERTICAL FORCE IS WEIGHT OF DRESSED POLE (DOES NOT INCLUDE PRECAST BASE WEIGHT).
2. MINIMUM CONCRETE BACKFILL VOLUME, SITE CONDITIONS MAY REQUIRE ADDITIONAL BACKFILL.

PRECAST BASE IDENTIFICATION

PRECAST BASE TYPE	PRECAST BASE WEIGHT	PRECAST BASE LENGTH	PROJECTION ABOVE GRADE	STANDARD EMBEDMENT	OUTSIDE DIAMETER
2B	1,690 LBS	17'-3"	7'-3"	10'-0"	12.00"
3B	2,470 LBS	20'-0"	8'-0"	12'-0".	13.38"

POLE IDENTIFICATION

POLE DESIGNATION	POLE TYPE	PRECAST BASE TYPE	FIXTURE CONFIGURATION (FIX. PER XARM)	FIXTURE AND ACCESSORIES EPA (FT^2)
A1	LSS60B	3B	8 (4) / (4)	17.6
A2, A3	LSS60A	2B	4 (4)	10.4
B1	LSS60B	3B	8 (4+4)	21.6
B2	LSS60B	3B	8 (4+4)	20.8
B3, B4	LSS60B	3B	8 (4+4)	24.8
C1	LSS60A	2B	5 (5)	12.5
C2	LSS60A	2B	5 (5)	13.0

DESIGN NOTES

DESIGN PARAMETERS:
WIND: V_{ult} = 115 MPH, V_{asd} = 89 MPH (EXPOSURE C, RISK CATEGORY II) PER INTERNATIONAL BUILDING CODE, 2012 EDITION (ASCE 7-10). DESIGN WIND PARAMETERS ARE AS NOTED, ACTUAL EXPOSURE MUST BE VERIFIED FOR THE SITE BY THE PROPER GOVERNING OFFICIAL.

GEOTECHNICAL PARAMETERS:
ALLOWABLE END BEARING SOIL PRESSURE: 1,500 PSF OR SKIN FRICTION: 250 PSF
ALLOWABLE LATERAL SOIL BEARING PRESSURE:
100 PSF/FT (GRADE TO -2'-0"); 200 PSF/FT (BELOW -2'-0")
IN ACCORDANCE WITH THE 2012 EDITION OF THE INTERNATIONAL BUILDING CODE, CHAPTER 18. SEE TABLE 1806.2, SOIL MATERIAL CLASS 5 & SECTION 1806.3.4.

DESIGN SOIL PARAMETERS ARE AS NOTED. ACTUAL ALLOWABLE SOIL PARAMETERS MUST BE VERIFIED ON SITE.

A GEOTECHNICAL ENGINEER OR REPRESENTATIVE OF IS RECOMMENDED (NOT REQUIRED) TO BE AVAILABLE AT THE TIME OF THE FOUNDATION INSTALLATION TO VERIFY THE SOIL DESIGN PARAMETERS AND TO PROVIDE ASSISTANCE IF ANY PROBLEMS ARISE IN FOUNDATION INSTALLATION.

ENCOUNTERING SOIL FORMATIONS THAT WILL REQUIRE SPECIAL DESIGN CONSIDERATIONS OR EXCAVATION PROCEDURES MAY OCCUR. POLE FOUNDATIONS WILL NEED TO BE ANALYZED ACCORDING TO THE SOIL CONDITIONS THAT EXIST. IF ANY DISCREPANCIES OR INCONSISTENCIES ARISE, NOTIFY THE ENGINEER OF SUCH DISCREPANCIES. FOUNDATIONS WILL THEN BE REVISED ACCORDINGLY. REVISIONS WILL BE ANALYZED PER RECOMMENDATIONS DIRECTED BY A REGISTERED ENGINEER.

ALL EXCAVATIONS MUST BE FREE OF LOOSE SOIL AND DEBRIS PRIOR TO FOUNDATION INSTALLATION AND CONCRETE BACKFILL PLACEMENT. TEMPORARY CASINGS OR DRILLERS SLURRY MAY BE USED TO STABILIZE THE EXCAVATION DURING INSTALLATION. CASINGS MUST BE REMOVED DURING CONCRETE BACKFILL PLACEMENT. CONCRETE BACKFILL MUST BE PLACED WITH A TREMIE WHEN SLURRY OR WATER IS PRESENT WITHIN THE EXCAVATION OR WHEN THE FREE DROP EXCEEDS 6'-0".

CONTRACTOR MUST BE FAMILIAR WITH THE COMPLETE SOIL INVESTIGATION REPORT AND BORINGS, AND CONTACT THE GEOTECHNICAL FIRM (IF NECESSARY) TO UNDERSTAND THE SOIL CONDITIONS AND THE POSSIBILITY OF GROUND WATER PUMPING AND EXCAVATION STABILIZATION OR BRACING DURING PRECAST BASE INSTALLATION AND PLACEMENT OF CONCRETE BACKFILL.

CONCRETE:
CONCRETE SHALL BE AIR-ENTRAINED AND HAVE A MINIMUM COMPRESSIVE DESIGN STRENGTH AT 28 DAYS OF 3,000 PSI. 3,000 PSI CONCRETE SPECIFIED FOR EARLY POLE ERECTION, ACTUAL REQUIRED MINIMUM ALLOWABLE CONCRETE STRENGTH IS 1,000 PSI. ALL PIERS AND CONCRETE BACKFILL MUST BEAR ON AND AGAINST FIRM UNDISTURBED SOIL.

GENERAL NOTES:
FIXTURES MUST BE LOCATED TO MAINTAIN 10'-0" MINIMUM HORIZONTAL CLEARANCE FROM ANY OBSTRUCTION. ENGINEER MUST BE NOTIFIED IF FOUNDATIONS ARE NEAR ANY RETAINING WALLS OR WITHIN / NEAR ANY SLOPES STEEPER THAN 3H : 1V. POLES, FIXTURES, PRECAST BASES, ELECTRICAL ITEMS AND INSTALLATION PER MUSCO LIGHTING.

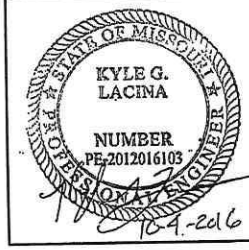

I HEREBY CERTIFY THAT THIS ENGINEERING DOCUMENT WAS PREPARED BY ME OR UNDER MY DIRECT PERSONAL SUPERVISION AND THAT I AM A DULY LICENSED PROFESSIONAL ENGINEER UNDER THE LAWS OF THE STATE OF MISSOURI.

KYLE G. LACINA - NO. PE-2012016103
LICENSE RENEWAL DATE: DECEMBER 31, 2016

STRUCTURAL ENGINEERS, P.C. - NO. 2006015958

DRAWING NO. COVERED BY THIS SEAL: C1

POND ATHLETIC ASSOCIATION SOFTBALL FIELD LIGHTING

musco Lighting

STRUCTURAL ENGINEERS, P.C.
114 NICHOLAS DRIVE

DRAWING TITLE: POLE AND FOUNDATION
SCALE: SEE PLAN
NOTES:

PROJECT NUMB 11104

DATE 04 OCTOBE

DRAWING NUME C1 OF ONE

USE OR REPRODUCTION OF THIS INFORMATION OTHER THAN ITS INTENDED PURPOSE FOR THIS PROJECT IS PROHIBITED WITHOUT WRITTEN CONSENT FROM MUSCO SPORTS LIGHTING, LLC.

E. WARRANTY

Musco Constant 25™

25-Year Product Assurance & Warranty Program

Musco Sports Lighting, LLC will provide all materials and labor to maintain operation of your lighting system to original design criteria for 25 years, or until maximum hours of coverage have accumulated, whichever comes first. Musco products and services are guaranteed to perform on your project as detailed in this document.

Light

Average Constant Light™ illumination levels are guaranteed through Musco's Smart Lamp® power regulator and service technology.

Musco will electronically monitor lamp operation and operating hours, and will group re-lamp as described in the Project Details on the following page.

Individual lamp outages that occur during the lamp warranty and maintenance period are repaired when the usage of any field is materially impacted. If actual usage exceeds the maximum hours of coverage, the customer will be required to purchase lamp replacements in order to maintain the warranty to the end of 25 years.

Energy Consumption

Average and maximum energy consumptions for your lighting system are guaranteed.

Monitoring, Maintenance and Control Services

Musco shall monitor the performance of your lighting system, including on/off status, hours of usage and lamp outages. If fixture outages that affect playability are detected, Musco will contact you and proactively dispatch technicians.

On-off control of your lighting system is provided via an easy-to-use web site scheduling system, phone, fax, or email. Our trained Control-Link Central™ service center staff is available toll-free 24/7. Regular usage reports are always available on Control-Link Central's web site.

Structural Integrity

Your project has been designed to IBC 2012, 115 mph, exposure C.

Structural integrity of equipment manufactured by Musco is guaranteed.

Musco has a team of people to ensure fulfillment of our product and services warranty and maintains financial reserves dedicated to support our fulfillment of this warranty. Please keep this document as your signed contract guaranteeing comprehensive service for the 25 year period.

Musco Constant 25™

25-Year Product Assurance & Warranty Program

Project Details

Project Name: Pond Athletic Association Baseball and Softball **Project Number:** 111042

Owner: Pond Athletic Association **City:** Glencoe **State:** MO

Product(s) Covered: Light-Structure Green™ System

Date Issued: Date of shipment

Expiration: Date of shipment + 25 years **or maximum hours of coverage noted below, whichever occurs first**

Total Average kW per hour: 90.72 **Total Maximum kW per hour:** 98.60

Musco products and services are guaranteed to perform on your project as follows:

Field/Zone	Fixture Quantity	Lamp Type/ Lamp Hours	Average Target Constant Light Level	Uniformity Max/Min	Total Relamps Included	Estimated Annual/25-Year Estimated Usage Hours	Maximum Hours of Coverage
Baseball	34	1500 Watt MZ / 5,000	50 FC Infield 30 FC Outfield	2.0:1.0 Infield 2.5:1.0 Outfield	1	300 / 7,500	10,000
Softball	24	1500 Watt MZ / 5,000	50 FC Infield 30 FC Outfield	2.0:1.0 Infield 2.5:1.0 Outfield	1	200 / 5,000	10,000

Musco Constant 25™

25-Year Product Assurance & Warranty Program

Terms and Conditions

Service under this Contract is provided by Musco Sports Lighting, LLC ("Musco") or an authorized servicer approved by Musco. Services performed under this Contract shall consist of furnishing labor and parts necessary to restore the operation of the Covered Product(s) to original design criteria provided such service is necessitated by failure of the Covered Product(s) during normal usage. This Contract covers Product(s) consisting of Musco's Green Generation Lighting® with Control-Link® and any additional Musco manufactured product as listed on page 2.

"We", "us" and "our" mean Musco. "You" and "your" mean the purchaser of the Covered Product(s). No one has the authority to change this Contract without the prior written approval of Musco. Musco shall not assume responsibility for their agents or assignees other than as described below. If there is a conflict between the terms of this Contract and information communicated either orally or in writing by one or more of our employees or agents, this Contract shall control.

Additional Provisions

1. **Availability of Service:** Control-Link Central operators shall be available 24/7 via web site, phone, fax, or email. Maintenance service specialists shall be available 8AM to 5PM Central Time, and services shall be rendered during these same hours in your local time zone, Monday through Friday (with the exception of national holidays). Hours of operation are subject to change without notice to you. Musco will exercise all reasonable efforts to perform service under this Contract, but will not be responsible for delays or failure in performing such services caused by adverse weather conditions, acts of any government, failure of transportation, accidents, riots, war, labor actions or strikes or other causes beyond its control.

2. **Determination of Repairs:** Musco will utilize the field monitoring system and any information provided by the customer to determine when the usage of the field is materially impacted. From this information, Musco will determine needed repair and/or replacement of Covered Product(s) and parts. Repair will be with product(s) of like kind and quality.

3. **Your Requirements Under this Contract:** You must meet all electrical and installation requirements as specified by the manufacturer. In addition, you promise and assure: full cooperation with Musco, Musco's technicians and authorized servicers during telephone diagnosis and repair of the Covered Product(s); reasonable accessibility of the Covered Product(s); a non-threatening and safe environment for service.

   You agree to check fuses and to replace fuses as needed. Musco provides spare fuses in the lowest alpha-numeric numbered enclosure. Musco will replenish spare fuses used.

   You agree to keep your Green Generation Lighting system online. This means keeping the required control voltage to the control system at all times. Any deviation from this practice must be discussed with Musco's Warranty Department.

4. **Service Limitations - This Contract does not cover:** Maintenance, repair or replacement necessitated by loss or damage resulting from any external causes such as, but not limited to, theft, environmental conditions, negligence, misuse, abuse, improper electrical/power supply, unauthorized repairs by third parties, attachments, damage to cabinetry, equipment modifications, vandalism, animal or insect infestation, physical damage to Covered Products parts or components, failure of existing structures, supporting electrical systems or any non-Musco equipment, or acts of God/ nature (including, but not limited to: earthquake, flood, tornadoes, typhoons, hurricanes or lightning).

5. **Contract Limitations:**

   a. EXCLUSIONS FROM COVERAGE: IN NO EVENT WILL MUSCO BE LIABLE FOR ANY SPECIAL, INDIRECT, INCIDENTAL OR CONSEQUENTIAL DAMAGES WHICH INCLUDE, BUT ARE NOT LIMITED TO, ANY DELAY IN RENDERING SERVICE OR LOSS OF USE DURING THE REPAIR PERIOD OF THE COVERED PRODUCT(S) OR WHILE OTHERWISE AWAITING PARTS.

   b. Limitation of Liability: To the extent permitted by applicable law, the liability of Musco, if any, for any allegedly defective Covered Product(s) or components shall be limited to repair or replacement of the Covered Product(s) or components at Musco's option. THIS CONTRACT IS YOUR SOLE EXPRESS WARRANTY WITH RESPECT TO THE COVERED PRODUCT(S). ALL IMPLIED WARRANTIES WITH RESPECT TO THE COVERED PRODUCT(S) INCLUDING, BUT NOT LIMITED TO, IMPLIED WARRANTIES OF MERCHANTABILITY AND FITNESS FOR A PARTICULAR PURPOSE, ARE HEREBY EXPRESSLY EXCLUDED.

   c. For the purposes of and by your acceptance of this Contract you acknowledge and agree that if a surety bond ("Bond") is provided the warranty and/or maintenance guarantee provided for in this Contract and any corresponding liability on behalf of the issuing surety under the Bond is limited to the first twelve (12) months of said warranty and/or maintenance guarantee coverage period. Any warranty and/or guarantee coverage period in excess of said initial 12 month period does not fall within the scope of the Bond and shall be the sole responsibility of Musco.

   d. Musco requires reasonable access for a crane or man lift equipment to service the lighting system. Musco will not be responsible for damage from operating the vehicle on the property when the equipment is operated in the prescribed manner over the designated access route.

6. **Transfer and Assignment:** Except to owners, you shall not have the right to assign or otherwise transfer your rights and obligations under this Contract except with the prior written consent of Musco; however, a successor in interest by merger, operation of law, assignment or purchase or otherwise of your entire business shall acquire all of your interests under this Contract.

7. **Governing Law:** Unless otherwise governed by applicable state law, the Contract shall be interpreted and enforced according to the laws of the State of Iowa.

8. **Subrogation:** In the event Musco repairs or replaces any Covered Product(s), parts or components due to any defect for which the manufacturer or its agents or suppliers may be legally responsible, you agree to assign your rights of recovery to Musco. You will be reimbursed for any reasonable costs and expenses you may incur in connection with the assignment of your rights. You will be made whole before Musco retains any amounts it may recover.

Signature: _____

Vice President of Sales

F. PRODUCT INFORMATION

Information contained herein is the confidential property of Musco Sports Lighting, LLC and/or its parent companies, affiliates, successors and assigns. Reproduction, distribution, or use of the information other than its limited, intended purpose without express written permission is prohibited.

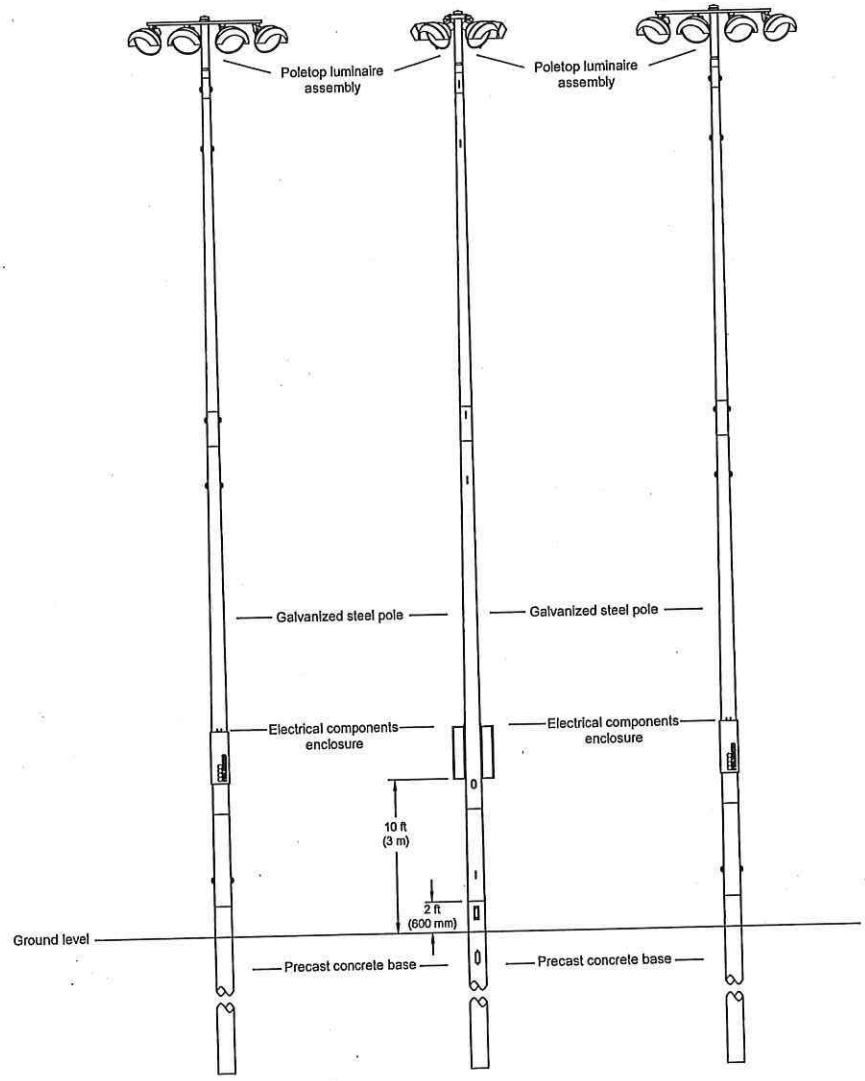

POLE(S): A1

Musco 60FT Light-Structure System™ pole
Green Generation™ luminaires

JOB NUMBER:	DATE:	BY:	R.L.	REVISIONS:
11104				
DRAWN BY: J Van Sc				
SCALE: NTS				
DATE: 09/30/2				
DRAWING NUMBER: 11104				
1 OF 4				

musco Lighting

CORPORATE OFFICE:
P.O. Box 808
100 1st Avenue West
Oskaloosa, Iowa 52577
t1 800-825-6020

Pond Athletic Association Softball
Glencoe,MO
Pole Configuration Drawing

Information contained herein is the confidential property of Musco Sports Lighting, LLC and/or its parent companies, affiliates, successors and assigns. Reproduction, distribution, or use of the information other than its limited, intended purpose without express written permission is prohibited.

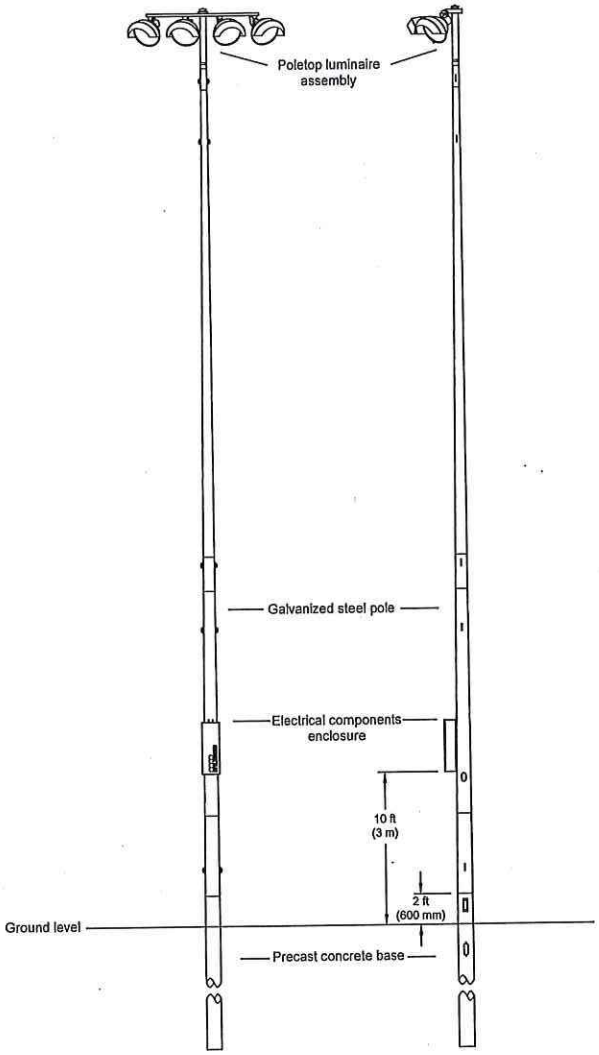

POLE(S): A2, A3

Musco 60FT Light-Structure System™ pole
Green Generation™ luminaires

JOB NUMBER: 111042	DATE:	BY:	R.L.	REVISIONS:
DRAWN BY: J Van Soeler				
SCALE: NTS				
DATE: 09/30/2016				
DRAWING NUMBER: 111042P				
2 OF 4 SHEET				

musco Lighting
CORPORATE OFFICE:
P.O. Box 808
100 1st Avenue West
Oskaloosa, Iowa 52577
+1-800-825-6020
+1-641-673-0411

Pond Athletic Association Softball
Glencoe, MO
Pole Configuration Drawing B

Information contained herein is the confidential property of Musco Sports Lighting, LLC and/or its parent, companies, affiliates, successors and assigns. Reproduction, distribution, or use of the information other than its limited, intended purpose without express written permission is prohibited.

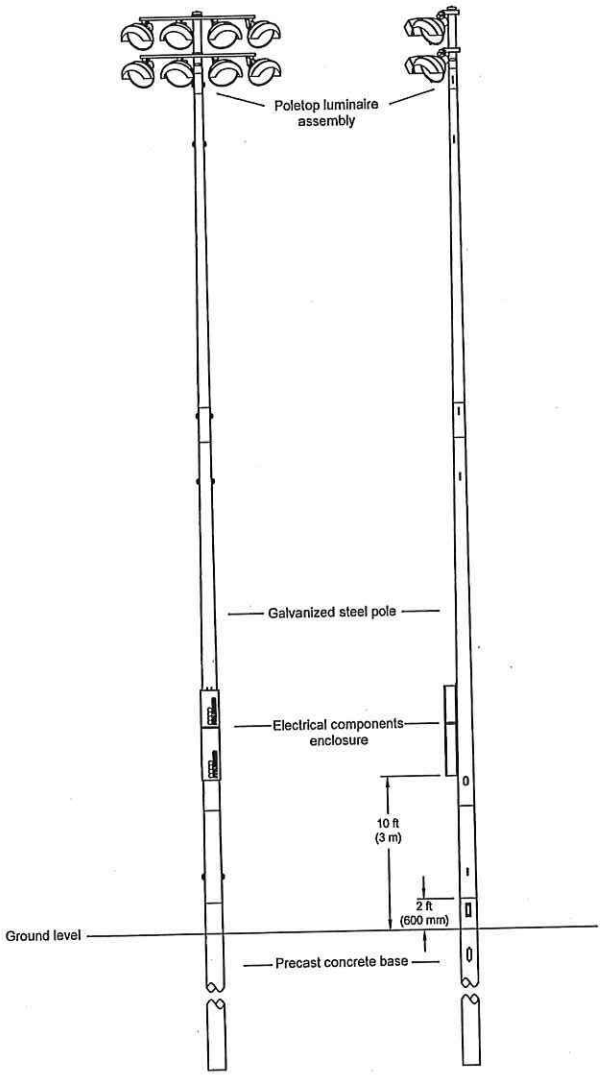

POLE(S): B1-B4

Musco 60FT Light-Structure System™ pole
Green Generation™ luminaires

JOB NUMBER: 11104	DATE:	BY:	R.L.
DRAWN BY: J. Van S	REVISIONS:		
SCALE: NTS			
DATE: 09/30/2			
DRAWING NUMBER: 11104			
3 OF 4			

MUSCO Lighting

CORPORATE OFFICE:
P.O. Box 808
100 1st Avenue West
Oskaloosa, Iowa 52577

Pond Athletic Association Softball
Glencoe, MO

Information contained herein is the confidential property of Musco Sports Lighting, LLC and/or its parent, subsidiaries, affiliates, successors and assigns. Reproduction, distribution, or use of this information, other than for intended purposes without express written permission is prohibited.

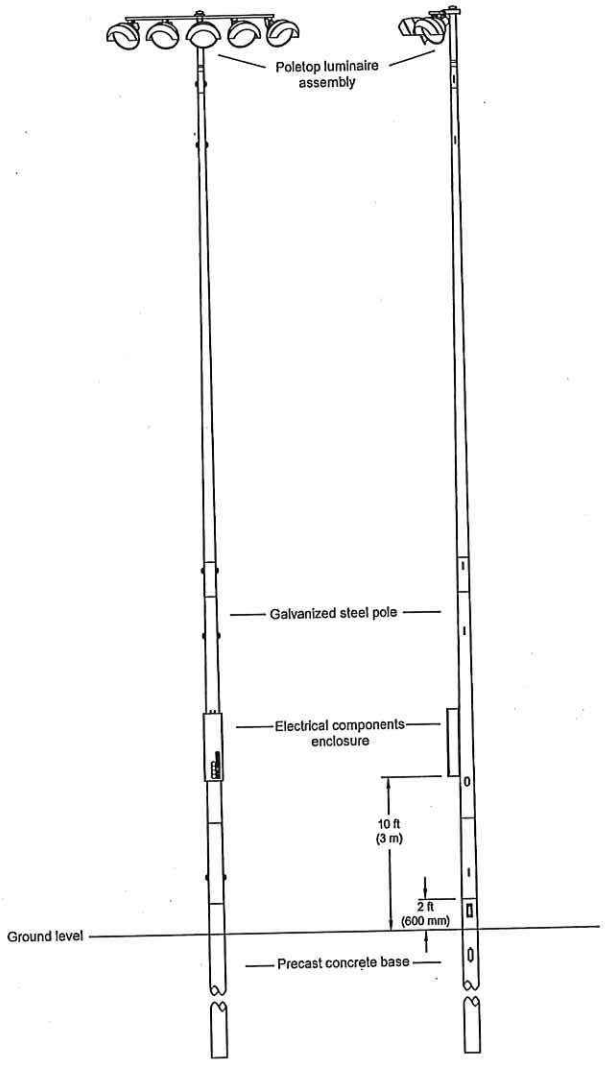

POLE(S): C1 & C2

Musco 60FT Light-Structure System™ pole
Green Generation™ luminaires

JOB NUMBER:	111042
DRAWN BY:	J Van Sc
SCALE:	NTS
DATE:	09/30/2
DRAWING NUMBER:	111042
4 OF 4	

DATE:	BY:	R.L.	REVISIONS:

musco Lighting
CORPORATE OFFICE:
P.O. Box 808
100 1st Avenue West
Oskaloosa, Iowa 52577
+1-800-825-6020

Pond Athletic Association Softball
Glencoe, MO
Pole Configuration Drawing

5 Easy Pieces™

Complete System from Foundation to Poletop

Factory wired, aimed, and tested

Fast, trouble-free installation

Comprehensive corrosion package

Integrated lightning ground

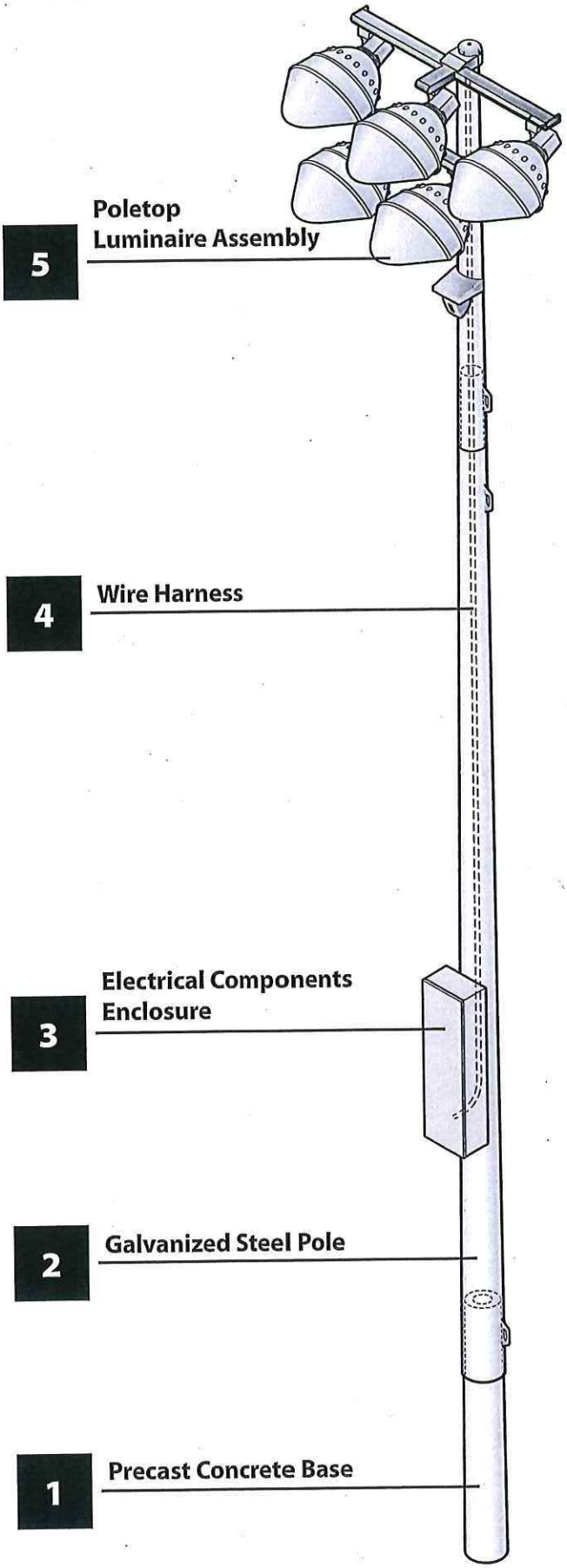

©2013 Musco Sports Lighting, LLC · U.S. and foreign patents pending. · M-1560-enUS-1

Precast Concrete Base – HID and LED

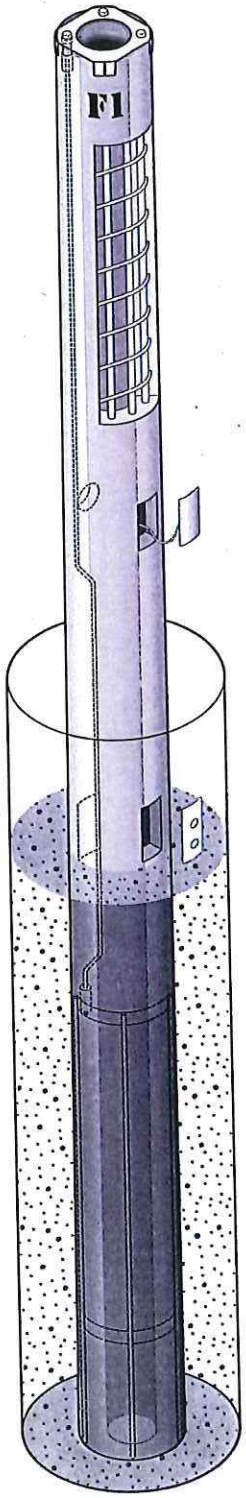

Overview

The precast concrete base is set directly into the ground and backfilled with concrete. The base includes an integrated lightning ground system.

Features

Base

- Set pole on base in 24 hours
- Tapered upper section for slip-fit steel pole
- Access holes for wire entry
- Epoxy coated ends prevent water intrusion
- Lifting hole accepts load-rated steel rod provided by Musco

Integrated Lightning Ground System

- Complies with NFPA 780, UL 96A, and EN 62305 standards when installed per Musco installation instructions
- UL Listed, Class II Lightning Protection, file number E337467
- Tested up to 100 kA by independent laboratory
- Steel pole interfaces with integrated grounding system by means of the pole grounding connector
- 2/0 AWG (crossectional area of 67.4 mm^2) grounding electrode conductor
- Concrete-encased grounding electrode, 20 feet (6.1 m) total length, ½ inch (12.7 mm) diameter

Technical Specifications

Base dimensions vary. For measurements refer to project specific *Foundation and Pole Assembly* drawing.

Construction

- Spun concrete construction
- Prestressed vertical strands and steel coil spiral for radial reinforcement throughout base
- Minimum design strength is 9500 lb/in^2 (65.5 MPa) at 28 days
- Meets ASTM C1804 design requirements

Quality Assurance Tests

- 28-day compressive strength
- Bending moment capacity
- Grounding system continuity

©2012, 2015 Musco Sports Lighting, LLC · U.S. patents issued. · M-1523-en04-4

Precast Concrete Base – HID and LED

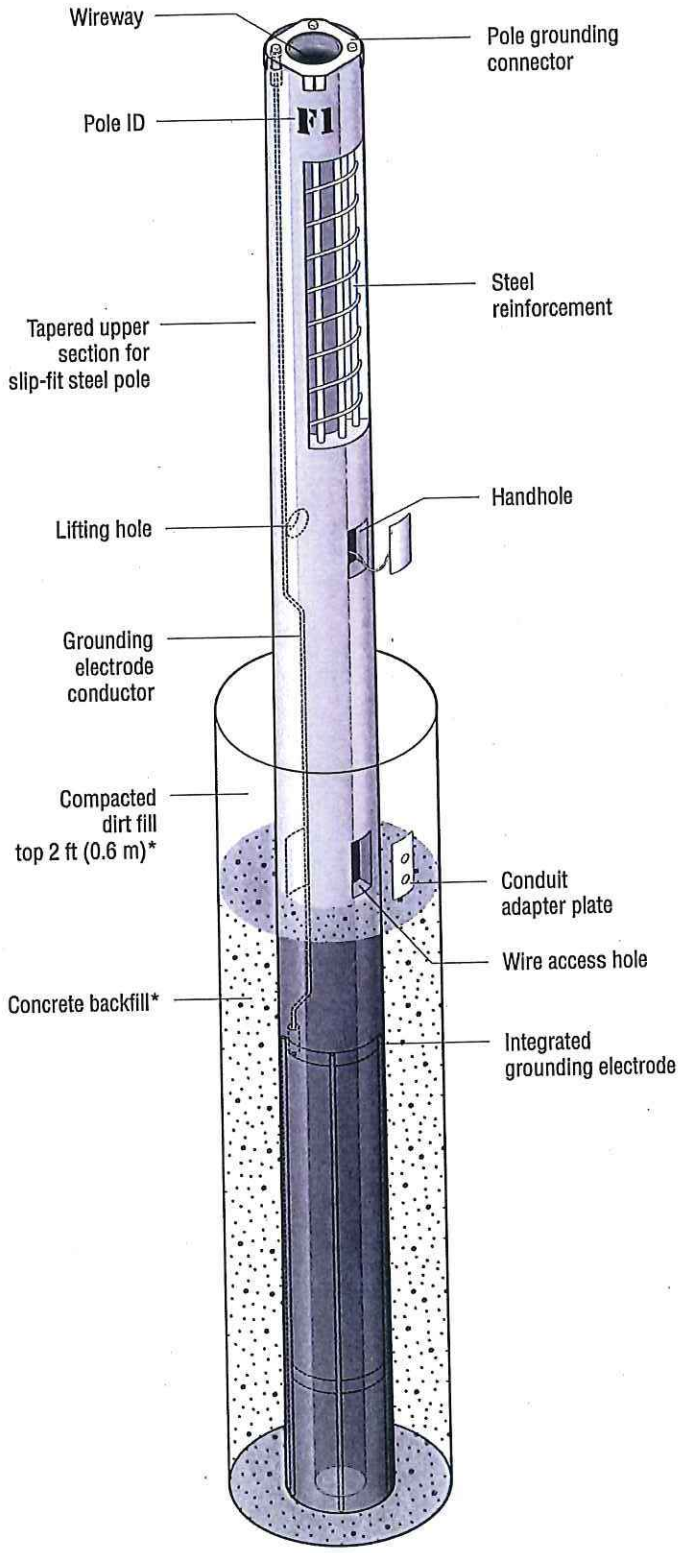

*Standard pier foundation shown. Foundation and/or backfill may vary per alternate foundation design.

©2012, 2015 Musco Sports Lighting, LLC · U.S. patents issued. · M-1523-en04-4

Galvanized Steel Pole

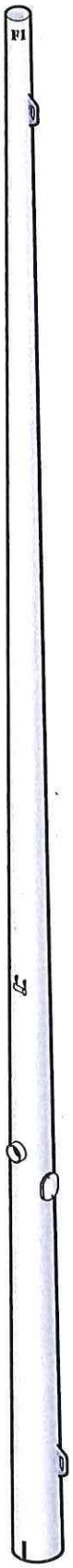

Overview

The galvanized steel pole is designed to slip-fit together with the precast concrete base and the poletop luminaire assembly.

Features

- Slip-fit connection allows pole assembly with come-alongs
- Built-in hardware for attaching electrical components enclosure
- Wire access from inside the pole (no exposed wiring or conduit)
- Shipped in sections for easier handling
- Labeled with pole identification for location on field

Technical Specifications

Pole dimensions vary. For measurements refer to project specific pole configuration drawing.

Construction

- Pole designs comply with all major building codes
- High strength, low alloy, tapered, round steel pole
- Hot-dip galvanized inside and outside after fabrication to ASTM-A123 standards
- Built to AASHTO stress standards
- Grounding lug
- Pole shipped in sections
- Stainless steel fasteners passivated and coated
- Material certifications are available

Quality Assurance Tests (periodic sampling)

- Bending stress
- Minimum galvanizing thickness
- Straightness measurement

©2005, 2013 Musco Sports Lighting, LLC · M-1496-en04-3

Galvanized Steel Pole

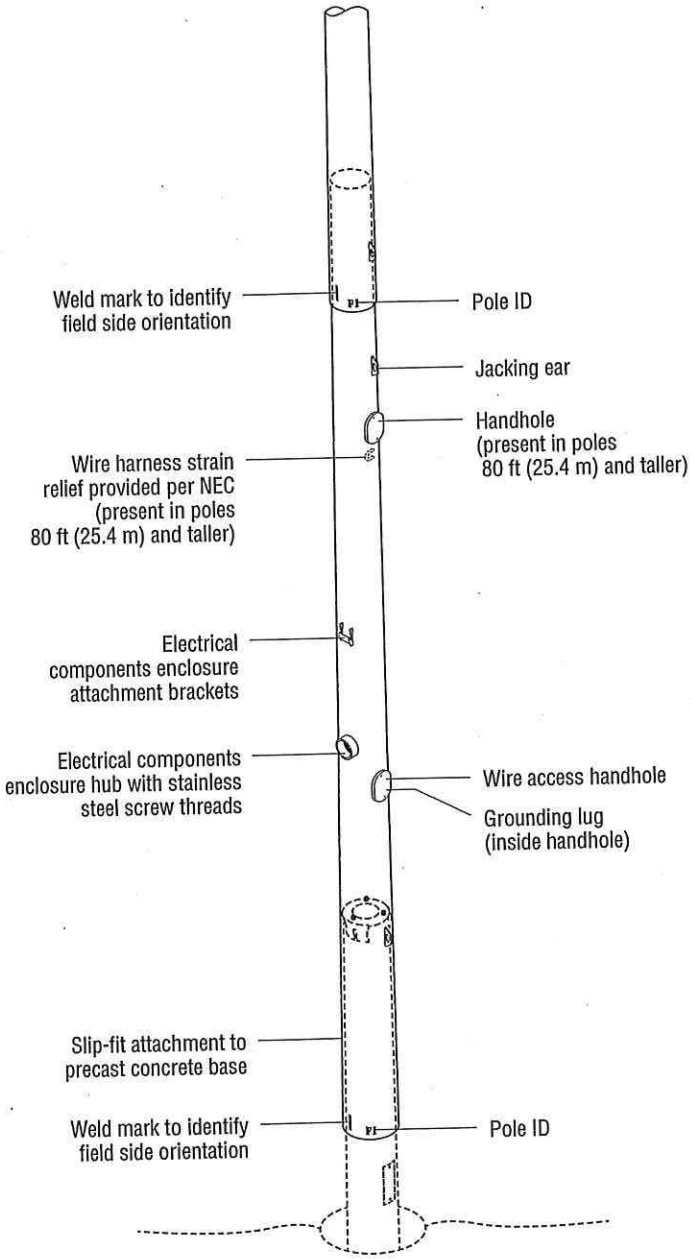

©2005, 2013 Musco Sports Lighting, LLC · M-1496-en04-3

Electrical Components Enclosure

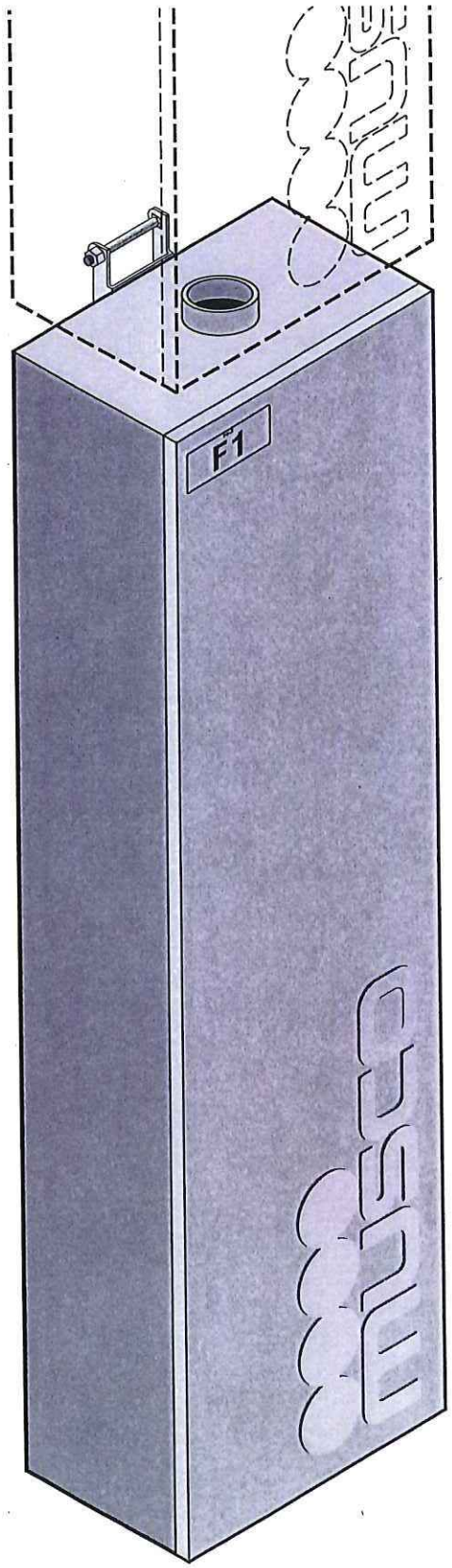

Overview

The electrical components enclosure contains all necessary equipment to operate luminaires. Built-in mounting hardware allows for easy attachment to the galvanized steel pole. Quick-connect plugs fasten to the wire harness.

Features

- Factory-built and tested as a unit
- Quick connect plug for easy field wiring
- Mounted 10 feet (3 m) above grade for servicing with ladder
- Labeled with pole identification and electrical information
- Luminaires individually fused and spare fuses supplied
- Wire access from inside the pole (no exposed wiring or conduit)
- Color coded wires and terminal blocks for phase wire distribution
- Disconnect per circuit
- Smart Lamp® control unit provides timed power adjustments

Technical Specifications

For amperage draws and circuitry refer to project-specific document.

Construction

- 0.08 inch (2 mm) thick, powder-coated aluminum
- NEMA type 3R (IP 44) enclosure
- Designed to operate in up to 55° C ambient temperature
- Full length stainless steel hinge
- All stainless steel fasteners passivated and coated
- Meets IEC touchsafe standards
- Up to six luminaires per enclosure

Quality Assurance Tests

- Grounding continuity
- High potential dielectric withstand
- Ballast and capacitor operation (open-circuit voltage and short-circuit current)
- Full functionality test

©2005, 2013 Musco Sports Lighting, LLC · U.S. and foreign patents issued and pending.
Smart Lamp® is a registered trademark in United States and Canada, trademarked in all other countries. · M-1309-en04-5

Electrical Components Enclosure

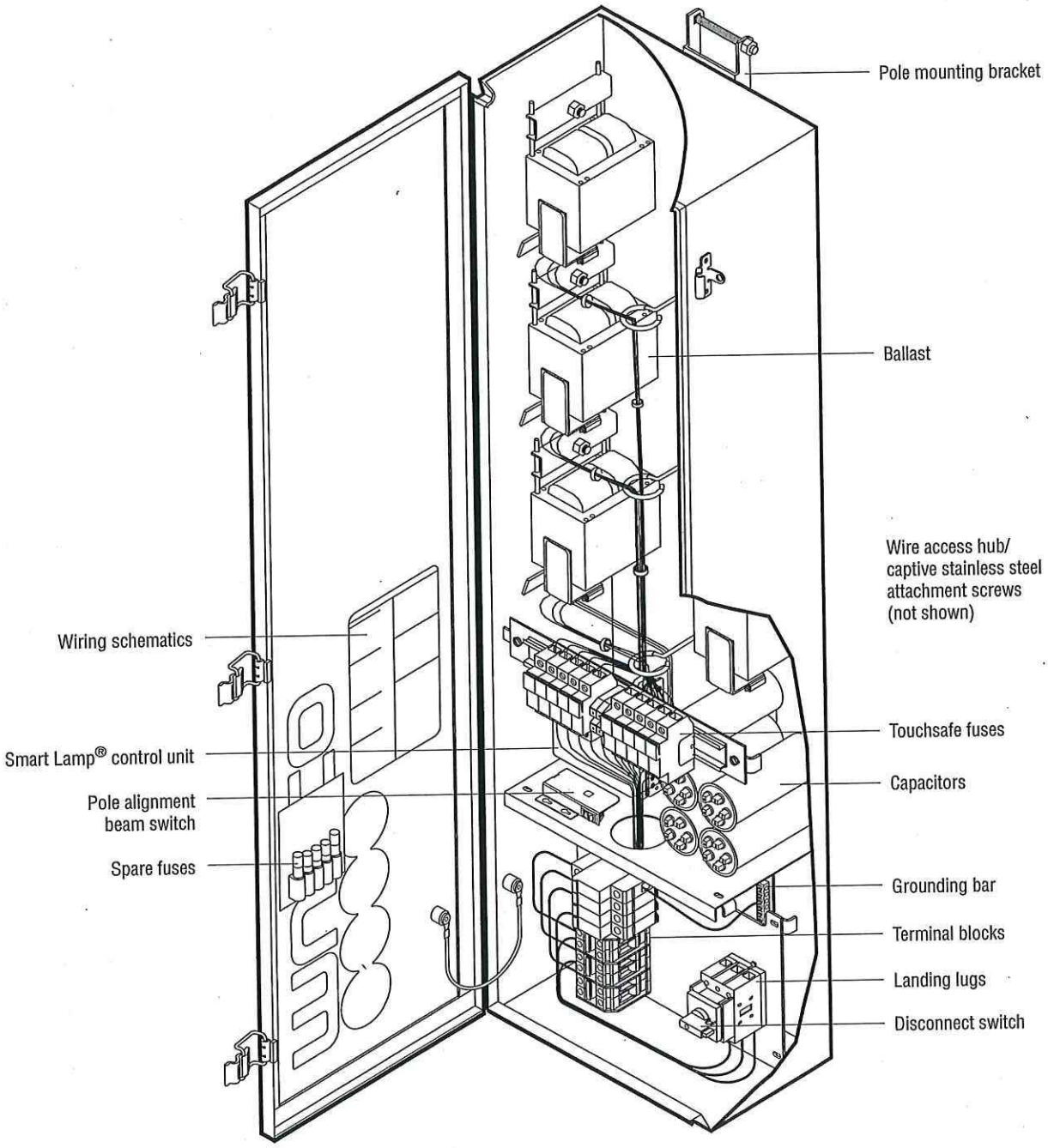

©2005, 2013 Musco Sports Lighting, LLC · U.S. and foreign patents issued and pending.
Smart Lamp® is a registered trademark in United States and Canada, trademarked in all other countries. · M-1309-en04-5

Wire Harness

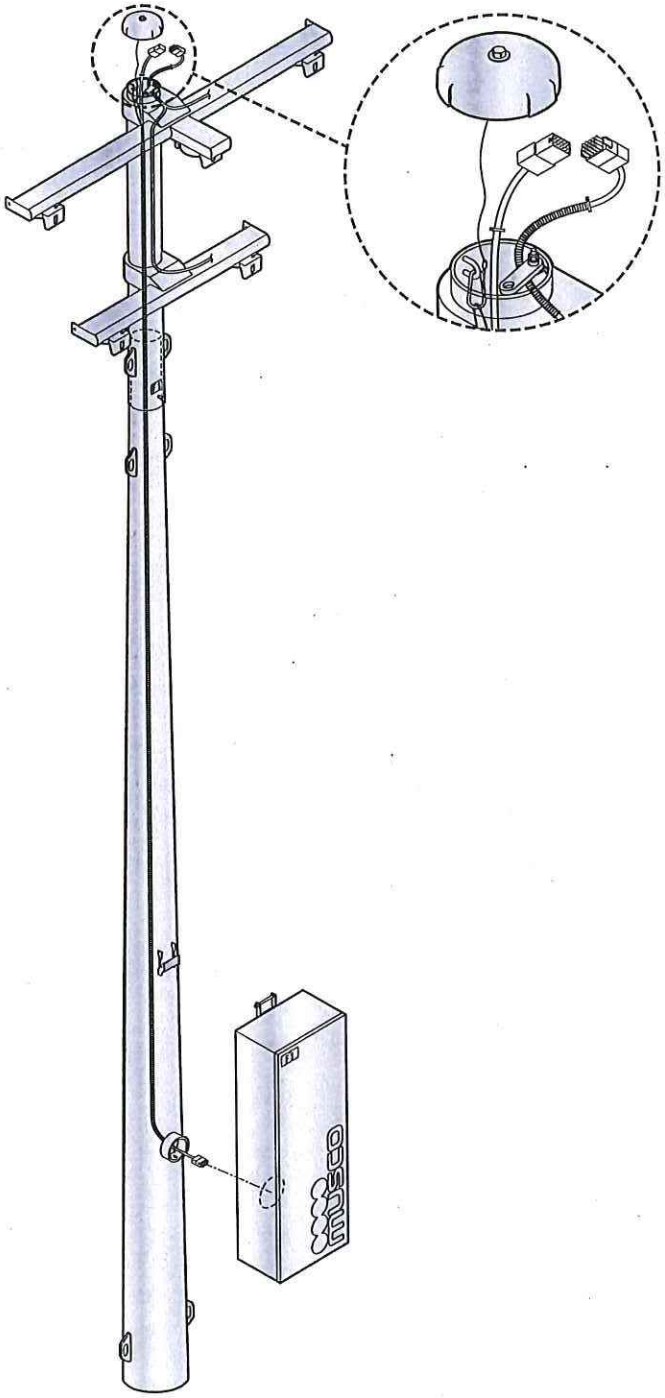

Overview

The factory-built wire harness connects the electrical components enclosure to the poletop luminaire assembly.

Features

- Factory-assembled support grip alleviates strain on connections
- Quick connect plugs for easy field wiring
- Spiral wound cable eliminates slippage
- Protective sleeve prevents wire damage
- All internal wiring, no exposed wires
- Labels identify pole and luminaires

Technical Specifications

Construction

- Spiral wound, wrapped cable, 14 AWG copper wire
- Integral wire support grip
- Two wires per luminaire
- Each harness supports up to six luminaires

Quality Assurance Tests

- Connector/load resistance
- High potential dielectric withstand
- Grounding continuity
- Termination crimp

©2005, 2013 Musco Sports Lighting, LLC · U.S. and foreign patents pending.

Wire Harness

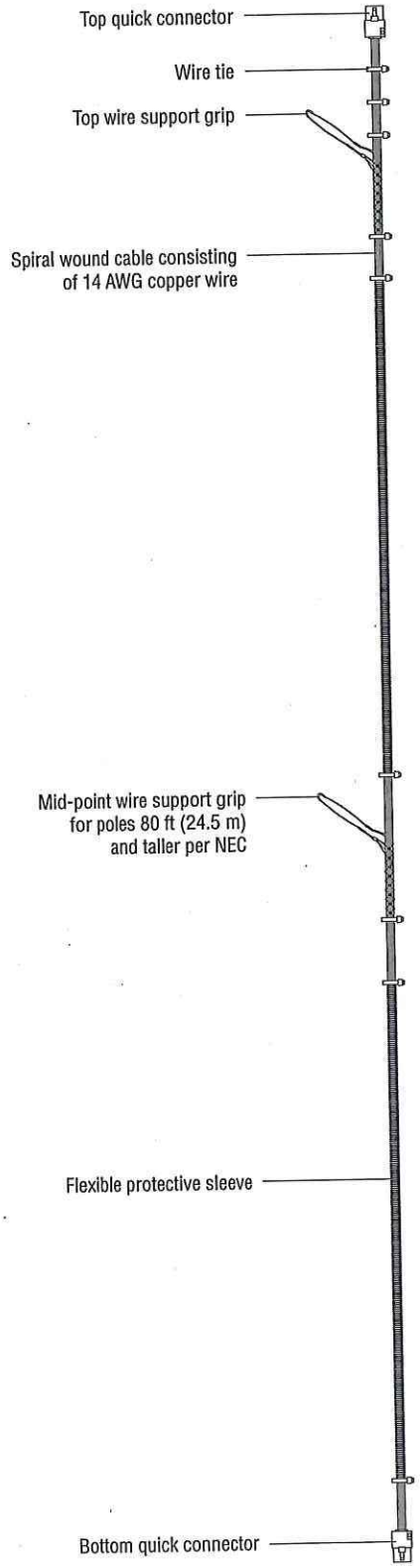

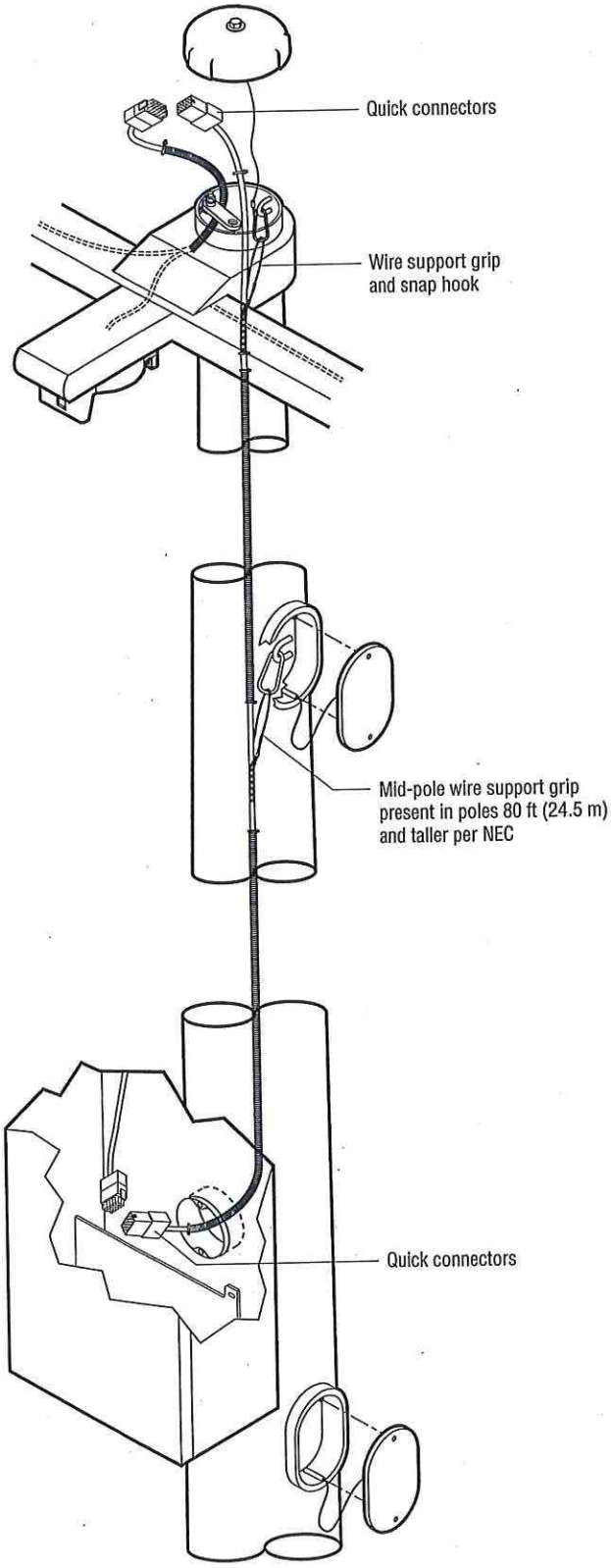

©2005, 2013 Musco Sports Lighting, LLC · U.S. and foreign patents pending.

Poletop Luminaire Assembly

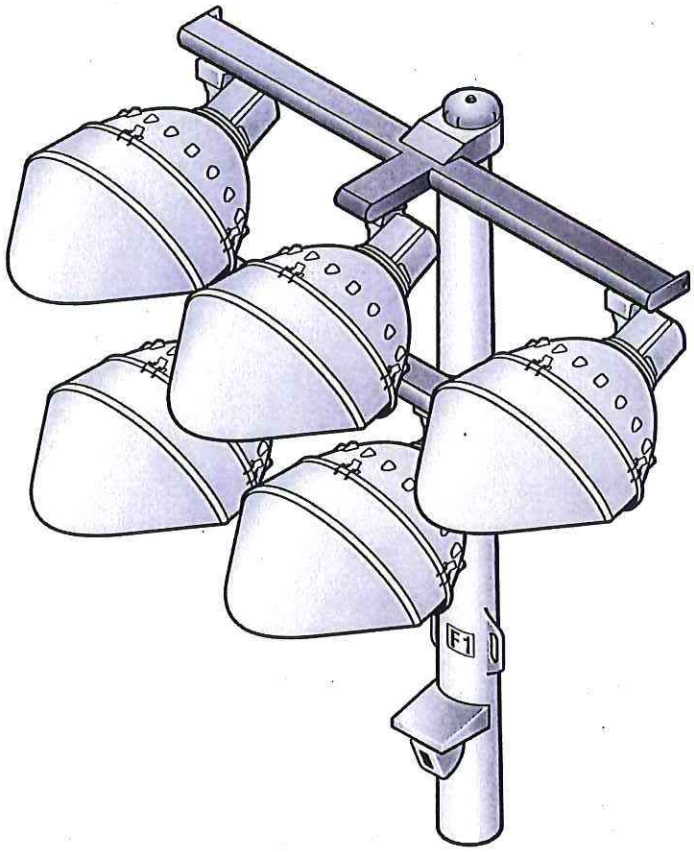

Overview

The factory-aimed poletop luminaire assembly is the upper section of the pole and slip-fits together with the galvanized steel pole.

Features

- Luminaire mounts and connects in a single step
- Slip-fit connection allows assembly with come-alongs
- D-shaped crossarm reduces wind loading
- Each luminaires is factory-built, tested, and ships as a unit
- Luminaries are factory-aimed to two-tenths degree of accuracy
- All luminaires are factory-wired to a quick-connect harness for easy installation
- Labels identify pole and luminaire location
- No exposed wiring or conduit
- Factory-set pole alignment beam allows easy field alignment

Technical Specifications

Construction

- Crossarms hot-dip galvanized after fabrication to ASTM-A123 standards
- All aluminum components powder-coated or anodized to mil-A-8625F
- Luminaire and knuckle powder-coated die-cast aluminum
- All stainless steel fasteners passivated and coated
- Crossarms constructed of ⅛ inch wall thickness D-shaped steel tubing
- Polecap attached with stainless steel lanyard and securing bolt

Quality Assurance Tests

- Reflector photometric test
- Lamp lumen output
- Galvanizing thickness
- High potential dielectric withstand
- Electrical continuity

©2005, 2013 Musco Sports Lighting, LLC · U.S. and foreign patents pending. · M-1500-en04-4

Poletop Luminaire Assembly

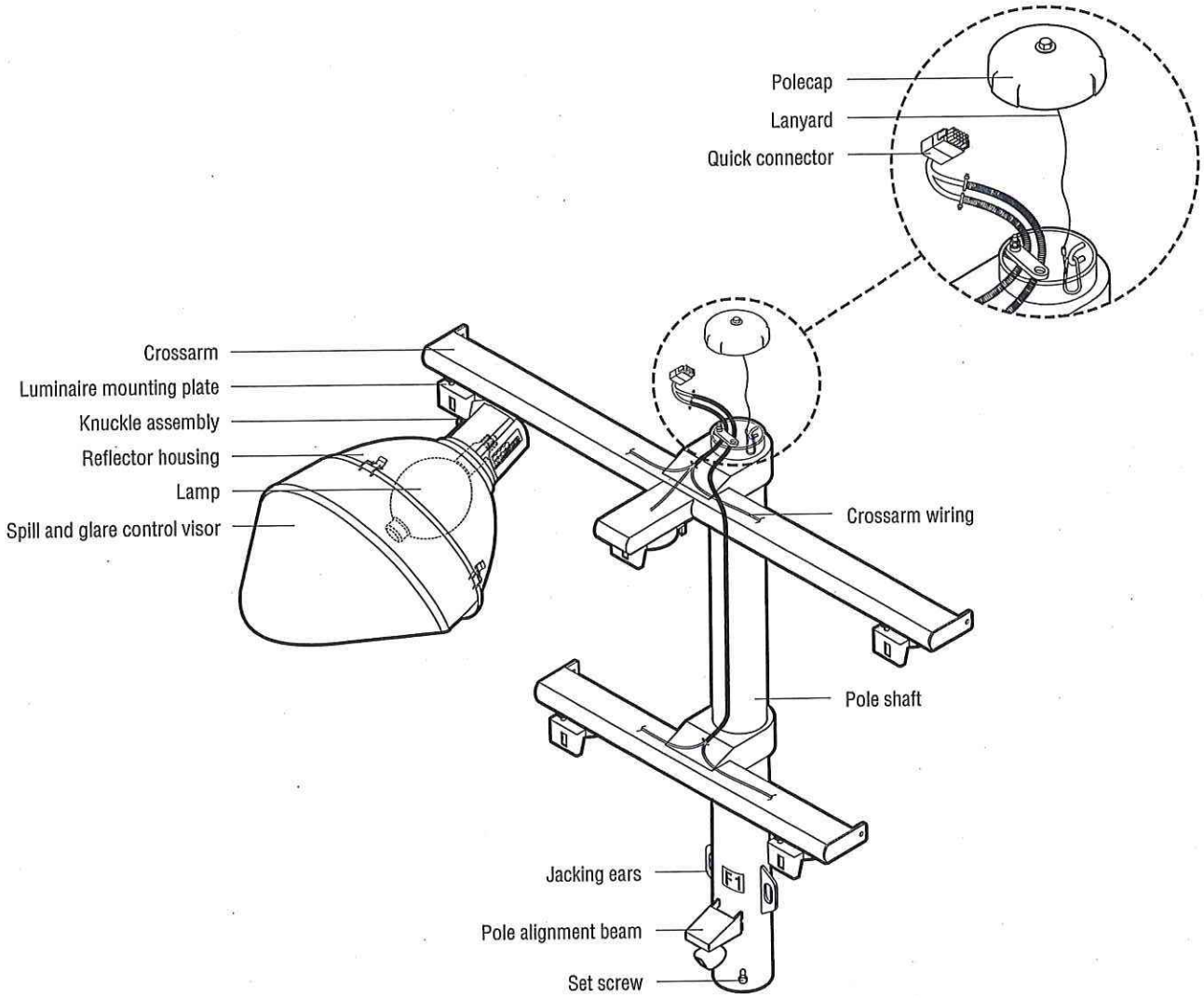

©2005, 2013 Musco Sports Lighting, LLC · U.S. and foreign patents pending. · M-1500-en04-4

Datasheet: **Smart Lamp® Operating System**

Z-Lamp™ Lamp and Ballast — 1500 Watt, 60 Hertz

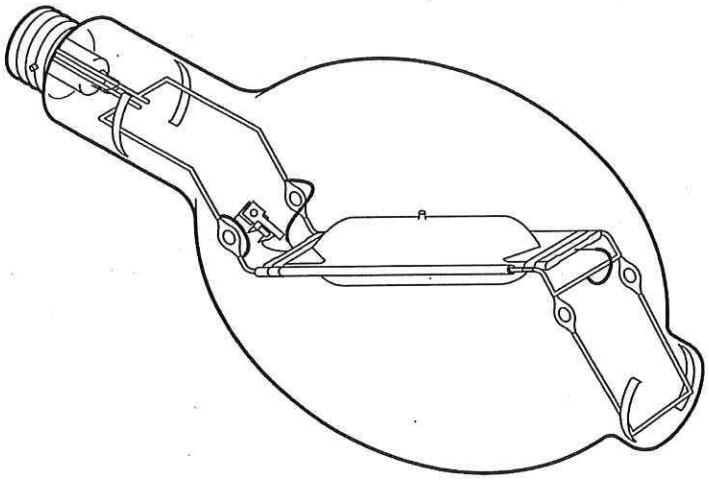

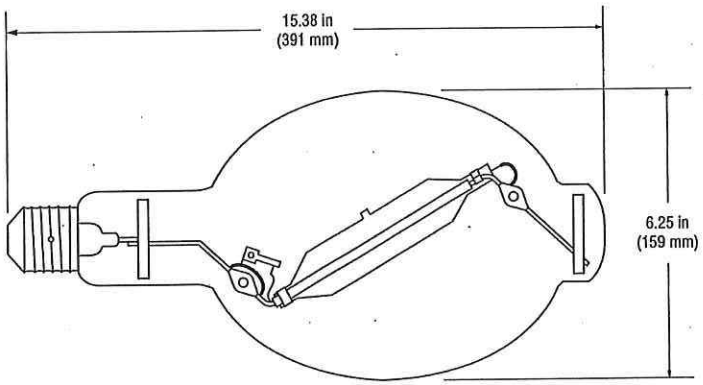

Lamp Data

Physical Characteristics

Lamp type ..... Z-Lamp™ HID metal halide (MH 1500/MZ)

Lamp designation M48

Bulb designation BT-56

Bulb finish ..... Clear

Operating position ..... Arc tube horizontal

Base ..... Mogul screw position oriented

Smart Lamp® Operating System Characteristics[1]

Constant lumens[2] ..... 134 000 lm

Useful lamp life[3] ..... 5000 h

CIE correlated color temperature (approximate) ..... 4200 K

Color rendering index (CRI) ..... $R_a = 65 - 70$

Warm-up time (80% output) ..... 3 – 5 min

CIE chromaticity coordinates (X, Y) ..... (0.370, 0.390)

Average lamp wattage[2] ..... 1450 W

Restrike time for hot lamp ..... 10 – 15 min

Maximum operating lamp current ..... 6.0 A

Minimum ambient starting temperature ..... -20 °F (-30 °C)

Footnotes:

1) Photometric and life testing conducted by an ISO 17025 accredited lab (Musco Sports-Lighting Photometry Lab, NVLAP Lab Code 200702-0). Operating characteristics are per the Musco Smart Lamp® operating system on a commercial ballast with arc tube horizontal. Lamp lumen measurements in accordance with IES LM-51-00. Lamp color data in accordance with IES LM-58-94. Lamp operating cycle of five hours per start to reflect expected field use in the sports lighting industry.

2) Lamp starts out at a reduced wattage and increases over life to offset lumen loss as lamp ages. Power dissipated by auxiliary equipment such as ballast, is not included in the lamp wattage shown.

3) Beyond 5000 hours is the time when constant lumens are no longer maintained by the Smart Lamp operating system. Average rated lamp life before failure is substantially greater than 5000 hours as tested and defined per IES LM-47-01 with five hours per start.

©2012, 2013 Musco Sports Lighting, LLC · Smart Lamp® is a registered trademark of Musco Corporation in the United States and Canada. Patents issued and pending. · M-1357-enUS-6

Z-Lamp™ Lamp and Ballast — 1500 Watt, 60 Hertz

Ballast Data

Physical Characteristics

Ballast type ..... Constant Wattage Autotransformer (CWA)

Ballast designation M48

Ballast approvals ..... UL Recognized Component, CSA Certified

Electrical Data

Power factor 97%

Line volts regulation* ..... ± 10%

Lamp watts regulation* ..... ± 10%

Nominal input power ..... 1564 W

UL insulation class ..... N (200 °C)

UL coil temperature code 1029 ..... A

*Musco requires line voltage within ± 3% to maintain light levels.

Typical Wiring

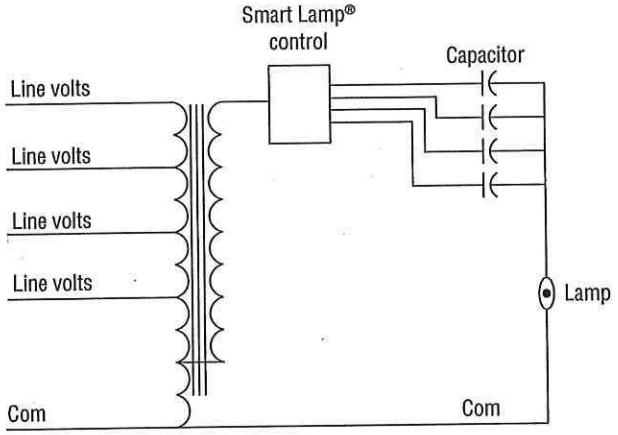

Input voltage/frequency	208 V/60 Hz	240 V/60 Hz	277 V/60 Hz	480 V/60 Hz
Maximum operating line current	8.6 A	7.5 A	6.5 A	3.7 A
Starting line current	7.4 A	6.5 A	5.3 A	2.9 A
Fuse rating	20 A	20 A	15 A	15 A

Warning

These lamps can cause serious skin burn and eye inflammation from short wave ultraviolet radiation if outer envelope of the lamp is broken or punctured. Do not use where people will remain for more than a few minutes unless adequate shielding or other safety precautions are used. Certain lamps that will automatically extinguish when the outer envelope is broken or punctured are commercially available. This lamp complies with FDA radiation performance standard USA:21CFR 1040.30 Canada:SOR/DORS/80-381.

Caution

Arc tubes of metal halide lamps are designed to operate under high pressure and at temperatures up to 1832 °F (1000 °C). If the arc tube ruptures for any reason, pieces of extremely hot glass might be discharged into the surrounding environment, with an associated risk of personal injury, property damage, burns, and fire.

To reduce the possibility of arc tube rupture, turn lamps off at least once per week for at least 15 minutes, in systems which are otherwise operating on a continuous basis (24 hours/day, 7 days/week).

Clean exterior luminaire lens when replacing lamp.

Hg - LAMP CONTAINS MERCURY

Manage in Accord with Disposal Laws

See www.lamprecycle.org or call 1-800-825-6020 or +1-641-673-0411.

©2012, 2013 Musco Sports Lighting, LLC · Smart Lamp® is a registered trademark of Musco Corporation in the United States and Canada. Patents Issued and pending. · M-1357-enUS-6

Sports Lighting

7 Answers to Common Questions

Bonus Information:
Funding Options
Inside back cover

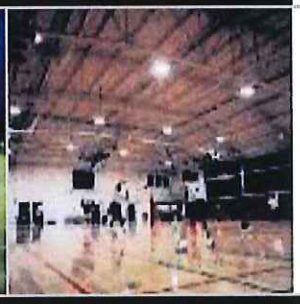

musco Lighting

We Make It Happen®

Decisions ... decisions ... decisions.

There are more decisions than you may realize in planning a sports-field lighting project. As the decision maker, the standards you set will affect recreation or athletic programs in your community for 20 to 30 years.

Obviously, you want your decisions to result in a trouble-free lighting system that will be a safe, energy-efficient source of pride rather than a disappointing source of continuing high-maintenance headaches and neighbors' complaints.

Lighting an outdoor sports facility is a big investment. You and your design consultant need to ask many questions about initial and long-term benefits to ensure you get the most value from the dollars you spend. The more you know about sports lighting, the better chance you have of getting the results you want.

To help get you started with your project, we've put together this guide to answer the most common questions people have about lighting a sports field.

Content: Answers to 7 Common Questions

1. What affects the cost of lighting my ballfield? **2**

2. How many lights do I need? **4**

3. What will it cost to operate my lighting system? **6**

4. If they use the same wattage bulb, aren't all fixtures the same? **8**

5. Our local utility company has offered to donate wood poles. How will these work on my field? **10**

6. There are no houses near my field, so why should I be concerned about spill light and glare? **12**

7. How can I make sure I get the results I want? **14**

Pole ID	Dimensioned From	Pole Location		Light Bank Mounting Height	Reflector NEMA Type	Number	Aiming Point			Aiming Angle		Group
		X	Y				X	Y	Z	HOR	VER	
A1	Baseball	-40.00	35.00	60.00	5	1	10.26	-23.78	0.00	R 48.1	38.38	A
					5	4	26.79	103.15	0.00	L 44.3	32.47	A
					4	2	98.77	21.44	0.00	R 5.1	23.02	A
					4	3	96.82	88.56	0.00	L 21.0	21.99	A
					5	5	-64.93	118.18	0.00	R 73.0	35.25	B
					5	8	-94.93	27.31	0.00	L 4.5	47.21	B
					4	6	-126.67	119.92	0.00	R 44.2	26.14	B
					4	7	-148.84	88.61	0.00	R 26.8	25.91	B
A2	Baseball	35.00	-35.00	60.00	5	35	108.50	27.77	0.00	R 48.4	32.28	A
					5	38	-15.03	2.48	0.00	L 51.6	44.86	A
					4	36	92.45	80.29	0.00	R 26.1	24.86	A
					4	37	15.18	77.92	0.00	L 9.4	27.47	A
A3	Softball	-40.00	35.00	60.00	5	39	5.08	-15.95	0.00	R 46.9	42.26	B
					5	42	-5.16	85.39	0.00	L 53.9	45.50	B
					4	40	71.74	26.50	0.00	R 3.8	27.99	B
					4	41	68.41	69.52	0.00	L 17.2	27.67	B
B1	Baseball	-40.00	165.00	60.00	4	9	70.56	52.08	0.00	R 44.9	20.80	A
					4	12	78.29	261.39	0.00	L 38.3	21.45	A
					4	10	125.03	112.39	0.00	R 17.4	18.89	A
					4	11	116.28	214.51	0.00	L 17.3	19.88	A
					4	13	20.47	34.58	0.00	R 64.7	21.91	A
					4	16	17.07	271.90	0.00	L 61.3	25.60	A
					4	14	103.56	86.44	0.00	R 28.4	19.16	A
					4	15	121.14	157.61	0.00	R 3.0	19.36	A
B2	Baseball	165.00	-35.00	60.00	4	27	256.34	73.48	0.00	R 39.2	22.95	A
					4	30	51.11	48.19	0.00	L 53.2	23.14	A
					4	28	140.71	107.47	0.00	L 10.1	22.24	A
					4	29	106.06	101.20	0.00	L 23.1	21.79	A
					4	31	267.04	4.91	0.00	R 68.2	28.01	A
					4	34	33.12	0.53	0.00	L 74.8	22.99	A
					4	32	199.92	102.66	0.00	R 13.8	21.81	A
					4	33	83.51	81.07	0.00	L 34.8	21.88	A
B3	Softball	-10.00	250.00	60.00	4	43	52.15	75.45	0.00	R 24.5	17.83	B
					4	46	156.32	169.35	0.00	L 18.2	17.84	B
					4	44	83.50	86.27	0.00	R 15.0	17.44	B
					4	45	135.37	133.55	0.00	L 6.0	17.63	B
					4	47	11.55	79.58	0.00	R 37.0	18.46	B
					4	50	160.18	183.01	0.00	L 22.6	17.34	B
					4	48	107.13	104.74	0.00	R 5.8	16.91	B
					4	49	147.90	154.73	0.00	L 13.6	17.11	B
B4	Softball	250.00	-10.00	60.00	4	51	167.12	164.96	0.00	R 18.8	17.08	B
					4	54	77.99	35.31	0.00	L 29.4	18.55	B
					4	52	153.36	158.30	0.00	R 14.9	16.97	B
					4	53	117.36	121.64	0.00	L -0.0	17.57	B
					4	55	179.40	165.60	0.00	R 22.2	16.78	B
					4	58	78.74	6.67	0.00	L 38.7	18.44	B
					4	56	142.58	141.22	0.00	R 9.3	17.01	B
					4	57	91.41	80.42	0.00	L 15.0	17.28	B
C1	Baseball	105.00	285.00	60.00	4	17	6.37	251.96	0.00	R 60.5	30.68	A
					4	21	216.00	216.98	0.00	L 68.0	25.21	A
					4	18	40.90	155.18	0.00	R 15.5	22.41	A
					4	20	182.27	171.51	0.00	L 43.7	23.63	A
					4	19	132.81	136.22	0.00	L 20.7	21.44	A
C2	Baseball	285.00	105.00	60.00	4	22	217.43	202.84	0.00	R 64.7	27.33	A
					4	26	260.36	-2.41	0.00	L 66.4	29.23	A
					4	23	164.42	185.33	0.00	R 43.2	22.51	A
					4	25	143.64	54.67	0.00	L 8.8	21.66	A
					4	24	143.51	125.03	0.00	R 18.1	22.58	A

MY PROJECT

Name: Pond Athletic Association Softball
Location: Glencoe,MO

Zone Description	Groups
Zone1	A,B
Zone2	A
Zone3	B

AIMING SUMMARY

CITY OF WILDWOOD
DEC 15 2016
DEPT OF PLANNING & PARKS

ENGINEERED DESIGN

By: Justin Van Soelen
File # / Date: 111042R2-prodR4.1 15-Dec-16

Not to be reproduced in whole or part without the written consent of Musco Sports Lighting, LLC. ©1981, 2016 Musco Sports Lighting, LLC.

EQUIPMENT LIST FOR AREAS SHOWN

Pole				Luminaires				
QTY	LOCATION	SIZE	GRADE ELEVATION	MOUNTING HEIGHT	LAMP TYPE	QTY / POLE	THIS GRID	OTHER GRIDS
1	A1	60'	-	60'	1500W MZ	4/4*	8	0
2	A2-A3	60'	-	60'	1500W MZ	4	4	0
4	B1-B4	60'	-	60'	1500W MZ	8	8	0
2	C1-C2	60'	-	60'	1500W MZ	5	5	0
9	TOTALS					58	58	0

* This structure utilizes a back-to-back mounting configuration

musco Lighting

MY PROJECT

Name: Pond Athletic Association Softball
Location: Glencoe,MO

GRID SUMMARY

Name: Blanket Grid
Size: 275'/310'/275' - basepath 90'
Spacing: 30.0' x 30.0'
Height: 3.0' above grade

CONSTANT ILLUMINATION

SUMMARY — HORIZONTAL FOOTCANDLES

	Entire Grid
Scan Average:	1.7
Maximum:	68
Minimum:	0
Avg / Min:	-
Max / Min:	-
UG (adjacent pts):	75.30
CU:	0.82
No. of Points:	4828

LUMINAIRE INFORMATION

Luminaire Type:	Green Generation
Design Usage Hours:	5,000 hours
Design Lumens:	134,000
Avg Lamp Tilt Factor:	1.000
No. of Luminaires:	58
Avg KW:	90.71 (98.6 max)

Guaranteed Performance: The CONSTANT ILLUMINATION described above is guaranteed for the design usage hours of the system.

Field Measurements: Illumination measured in accordance with IESNA RP-6-15 and CIBSE LG4. Individual values may vary. See the Warranty document for details.

Electrical System Requirements: Refer to Amperage Draw Chart and/or the "Musco Control System Summary" for electrical sizing.

Installation Requirements: Results assume +/- 3% nominal voltage at line side of the ballast and structures located within 3 feet (1m) of design locations.

BLANKET GRID- HORIZONTAL

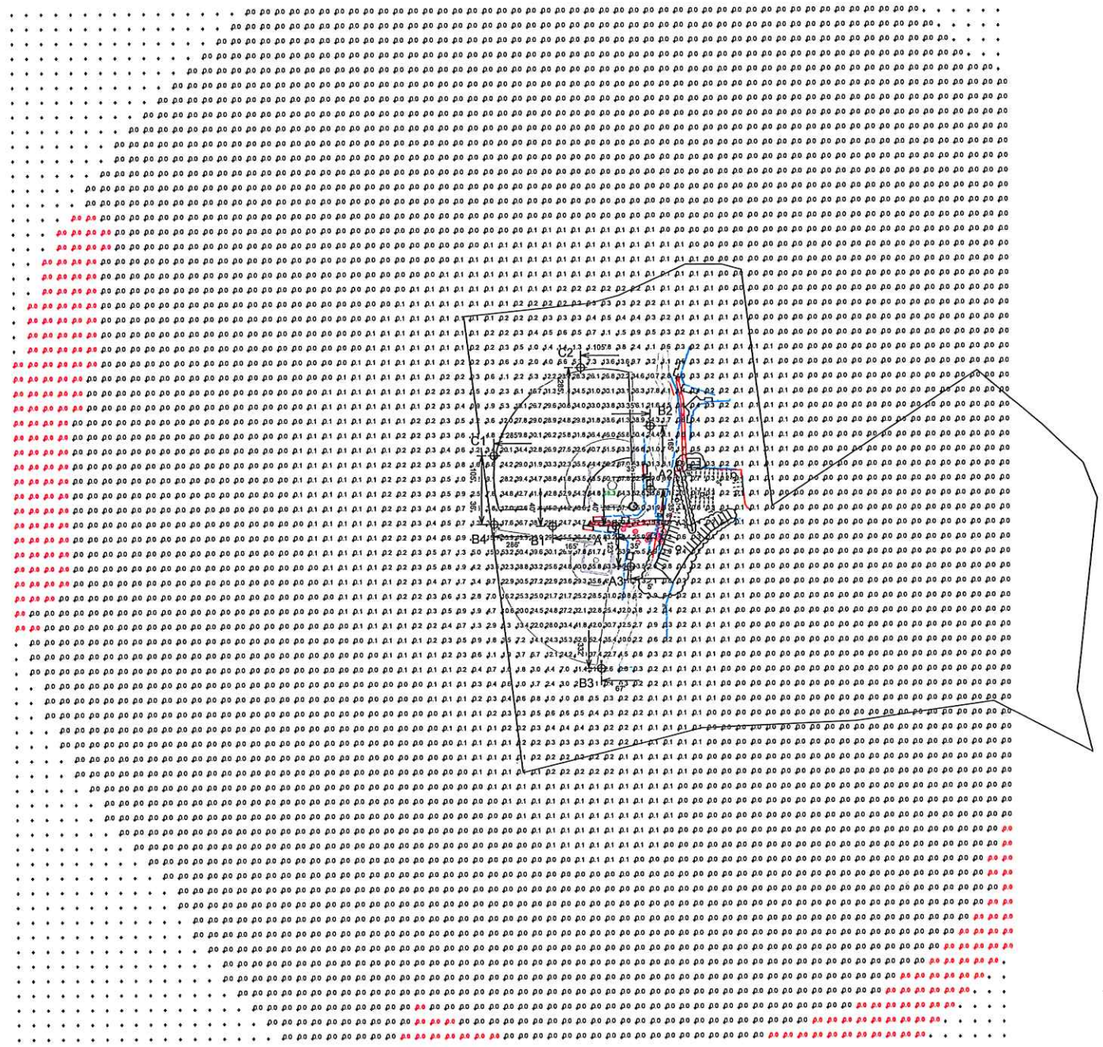

DEPT OF PLANNING & PARKS
DEC 15 2016
CITY OF WILDWOOD

SCALE IN FEET 1 : 200
0' 200' 400'

Pole location(s) ✚ dimensions are relative to 0,0 reference point(s) ⊗

ENGINEERED DESIGN

By: Justin Van Soelen
File # / Date: 111042R2-prodR4.1 15-Dec-16

Not to be reproduced in whole or part without the written consent of Musco Sports Lighting, LLC. ©1981, 2016 Musco Sports Lighting, LLC.

ILLUMINATION SUMMARY

EQUIPMENT LIST FOR AREAS SHOWN

Pole				Luminaires				
QTY	LOCATION	SIZE	GRADE ELEVATION	MOUNTING HEIGHT	LAMP TYPE	QTY / POLE	THIS GRID	OTHER GRIDS
1	A1	60'	-	60'	1500W MZ	4/4*	8	0
2	A2-A3	60'	-	60'	1500W MZ	4	4	0
4	B1-B4	60'	-	60'	1500W MZ	8	8	0
2	C1-C2	60'	-	60'	1500W MZ	5	5	0
9	TOTALS					58	58	0

* This structure utilizes a back-to-back mounting configuration

musco Lighting

MY PROJECT

Name: Pond Athletic Association Softball
Location: Glencoe,MO

GRID SUMMARY

Name: Blanket Grid
Size: 275'/310'/275' - basepath 90'
Spacing: 30.0' x 30.0'
Height: 3.0' above grade

CONSTANT ILLUMINATION

SUMMARY	MAX VERTICAL FOOTCANDLES Entire Grid
Scan Average:	2.6
Maximum:	87
Minimum:	0
Avg / Min:	-
Max / Min:	-
UG (adjacent pts):	585.17
CU:	0.82
No. of Points:	4828

LUMINAIRE INFORMATION	
Luminaire Type:	Green Generation
Design Usage Hours:	5,000 hours
Design Lumens:	134,000
Avg Lamp Tilt Factor:	1.000
No. of Luminaires:	58
Avg KW:	90.71 (98.6 max)

Guaranteed Performance: The CONSTANT ILLUMINATION described above is guaranteed for the design usage hours of the system.

Field Measurements: Illumination measured in accordance with IESNA RP-6-15 and CIBSE LG4. Individual values may vary. See the Warranty document for details.

Electrical System Requirements: Refer to Amperage Draw Chart and/or the "Musco Control System Summary" for electrical sizing.

Installation Requirements: Results assume +/- 3% nominal voltage at line side of the ballast and structures located within 3 feet (1m) of design locations.

BLANKET GRID-VERTICAL

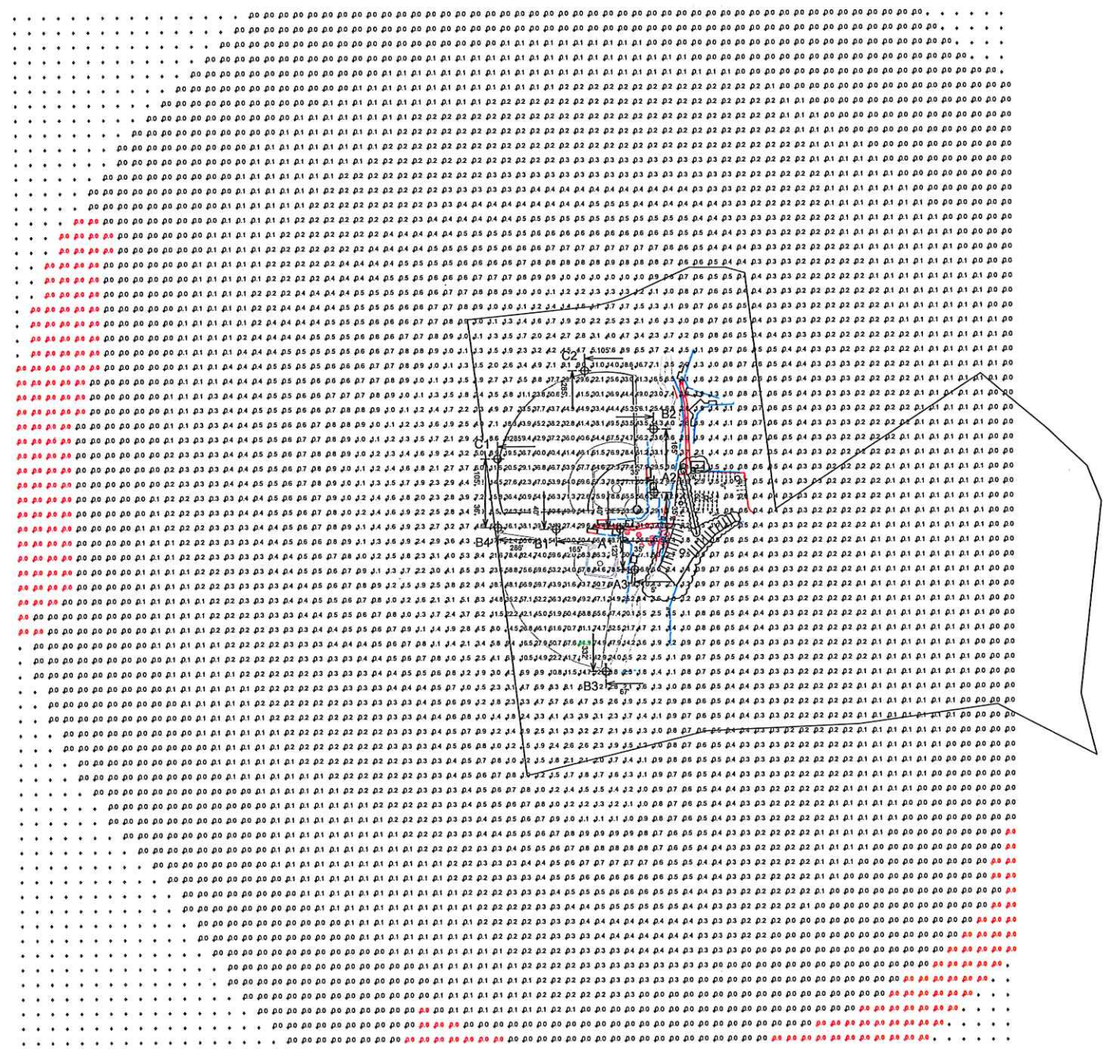

DEPT OF PLANNING & PARKS
DEC 15 2016
CITY OF WILDWOOD

SCALE IN FEET 1 : 200
0' 200' 400'

Pole location(s) ✚ dimensions are relative to 0,0 reference point(s) ⊗

ENGINEERED DESIGN

By: Justin Van Soelen
File # / Date: 111042R2-prodR4.1 15-Dec-16

Not to be reproduced in whole or part without the written consent of Musco Sports Lighting, LLC. ©1981, 2016 Musco Sports Lighting, LLC.

ILLUMINATION SUMMARY

TRACTS OF LAND IN THE NORTHWEST & SOUTHWEST FRACTIONAL 1/4 OF SECTION 35 TOWNSHIP 45 NORTH, RANGE 3 EAST CITY OF WILDWOOD, ST. LOUIS COUNTY, MISSOURI

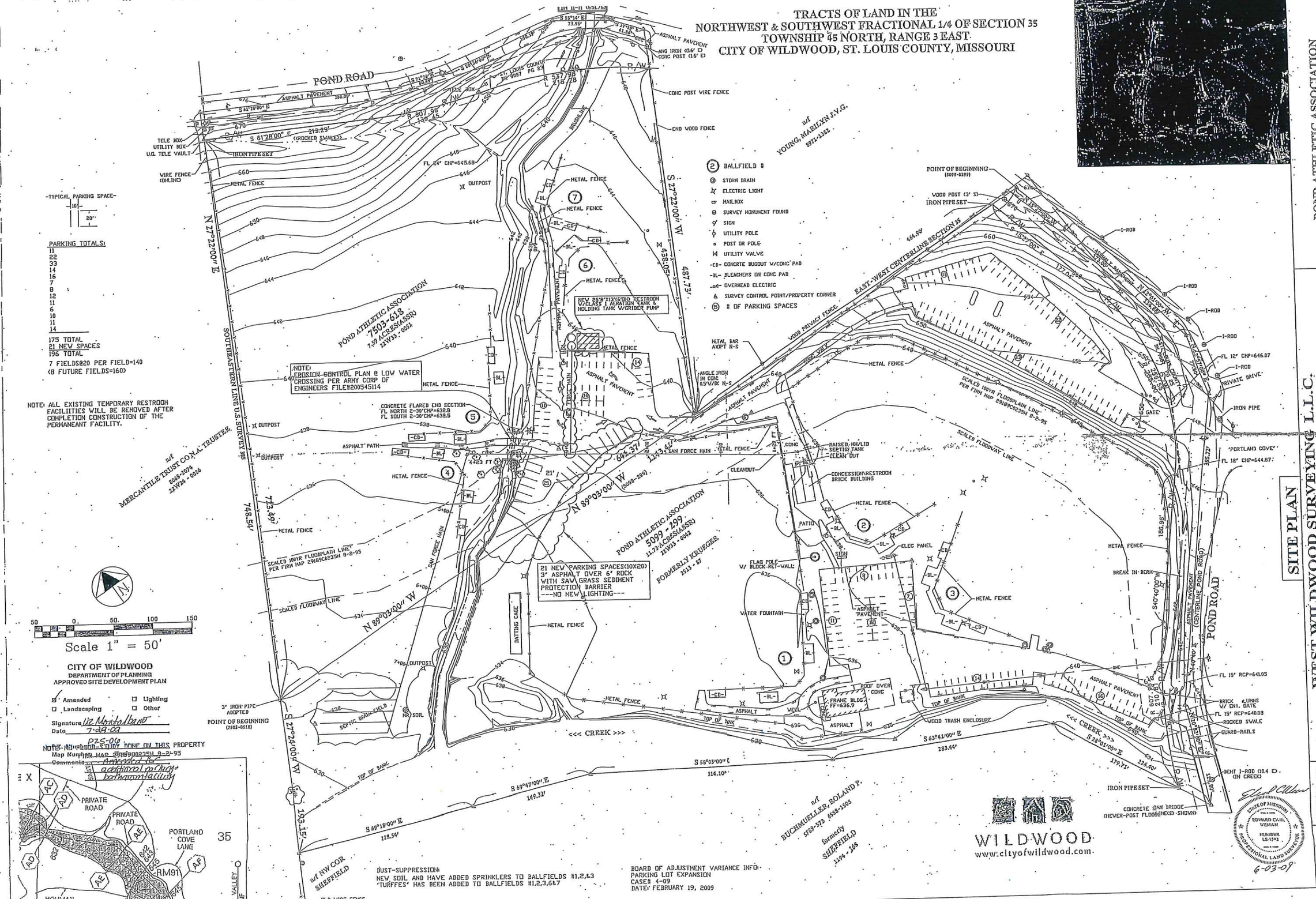

-TYPICAL PARKING SPACE-

PARKING TOTALS:
11
22
33
14
16
7
8
12
11
6
10
11
14

175 TOTAL
21 NEW SPACES
196 TOTAL

7 FIELDS@20 PER FIELD=140
(8 FUTURE FIELDS=160)

NOTE: ALL EXISTING TEMPORARY RESTROOM FACILITIES WILL BE REMOVED AFTER COMPLETION CONSTRUCTION OF THE PERMANEANT FACILITY.

Scale 1" = 50'

CITY OF WILDWOOD
DEPARTMENT OF PLANNING
APPROVED SITE DEVELOPMENT PLAN

☑ Amended ☐ Lighting
☐ Landscaping ☐ Other

Signature Liz Montalbano
Date 7-29-09
P25-06

NOTE: NO FLOOD STUDY DONE ON THIS PROPERTY
Map Number FIRM MAP 29189C0235H 8-2-95
Comments Amended for additional parking & bathroom facility

DUST-SUPPRESSION:
NEW SOIL AND HAVE ADDED SPRINKLERS TO BALLFIELDS #1,2,&3
'TURFFES' HAS BEEN ADDED TO BALLFIELDS #1,2,3,6&7

BOARD OF ADJUSTMENT VARIANCE INFO:
PARKING LOT EXPANSION
CASE# 4-09
DATE: FEBRUARY 19, 2009

WILDWOOD
www.cityofwildwood.com

STATE OF MISSOURI EDWARD CARL WEMAN NUMBER LS-1592 PROFESSIONAL LAND SURVEYOR
6-03-09

POND ATHLETIC ASSOCIATION
1725 POND ROAD
WILDWOOD MISSOURI
CONTACT# (314)-747-5733 CELL#(314)-691-0940

SITE PLAN

WEST WILDWOOD SURVEYING L.L.C.
36A CATHCART DRIVE - ELLISVILLE, MO 63021-4616
OFFICE & FAX: (636)-394-6090 CELL: 314-920-6645

SERVICES:
OUTBOUNDARYS, TOPOS, SEPTIC DESIGNS, TREE PRESERVATION, SITE PLANS, FOUNDATION STAKE-OUTS & SPOTS

ORDER NO. 0647
DRAWN dmw
CHECKED EW
DATE 6-03-09

SHEET 1 OF 1