Agenda
for the
POND-GROVER LOOP ROAD COMMITTEE
City Hall Council Chambers – 16860 Main Street
Tuesday, June 28, 2016
7:00 p.m. to 9:00 p.m. - Council Chambers @ City Hall

Re: Presentation of Traffic Analysis and Roadway Concepts by Lochmueller Group

I. Welcome To Group Members And Opening Comments By Chair Baugus

II. Approval Of Minutes From The May 24, 2016 Meeting

Documents: II. DRAFT MINUTES FOR 5-24-16 P-G LOOP RD COMMITTEE MTG.PDF

III. Discussion Of Topics And Consideration Of Information By The Committee

1. Discussion On Revised Traffic Analysis By City Of Wildwood/Lochmueller Group

Documents: UPDATED POND GROVER LOOP TRAFFIC STUDY - UPDATED RED.PDF

2. Presentation Of Potential Roadway Concepts

Documents: POTENTIAL ROADWAY CONCEPTS.PDF

3. Review Of Other Requested Items

A. Information On Roadways Not Extended Within Wildwood

Documents: III.C.I. INFORMATION ON ROADWAYS NOT EXTENDED WITHIN

WILDWOOD.PDF

B. List Of Subdivisions Where Secondary Emergency Access Was Required

Documents: III.C.II. LIST OF SUBDIVISIONS WHERE SECONDARY EMERGENCY ACCESS WAS REQUIRED.PDF

C. Questions & Answers From May 24, 2016 Committee Meeting

D. Document With Home Price Sales Around The Pond-Grover Loop Road

Documents: III.C.IV. DOCUMENT WITH HOME PRICE SALES AROUND THE POND-GROVER LOOP ROAD.PDF

E. Aerial Map Of Impacted Area, Along With Sales Dates Of Property

Documents: III.C.V. AERIAL MAP OF IMPACTED AREA, ALONG WITH SALES DATES OF PROPERTY.PDF

4. Comments And Questions From Committee Members

5. Public Comments

6. Next Meeting Date Of The Committee – July 26, 2016 – Tuesday (7:00 P.m.)

7. Closing Remarks/Adjournment

POND-GROVER LOOP ROAD COMMITTEE

Record of Proceedings
City Hall Community Room - 16860 Main Street
Tuesday, May 24, 2016
7:00 p.m. to 9:00 p.m.

I. Welcome to Group Members and Opening Comments by Chair Baugus

Chair Baugus called the meeting to order at 7:00 p.m. and welcomed everyone in attendance. A roll call of members was conducted, with the following members in attendance: Christy Pitney, Paul Pohlers, Ed Marshall (Council Member Ward 2), Joe Garritano (Council Member Ward 8) – arrived at 8:50 p.m., Jim Baugus (Council Member Ward 3), and Mayor Bowlin. Committee Member Sinden was absent.

Other City Officials present: Debra Smith McCutchen (Council Member Ward 5) and Dave Bertolino (Council Member Ward 5).

Staff Members present: Director of Public Works Rick Brown, Director of Planning and Parks Joe Vujnich, and Assistant Director of Planning and Parks Kathy Arnett.

II. Approval of Minutes from the May 10, 2016 Meeting

A motion was made by Council Member Marshall, seconded by Committee Member Pitney, to approve the minutes from the May 10, 2016 meeting.

A voice vote was then taken on the motion and, with a unanimous affirmative result, it was declared approved and the minutes passed.

III. Discussion of Topics and Consideration of Information by the Committee

Director of Planning and Parks Vujnich noted two (2) items were included in the packet that are not for discussion on the agenda, but were requests from previous meetings. Given the importance of the traffic study, the Department wants to ensure ample time is available. These items will be on the agenda for the June meeting.

a. Discussion on Traffic Analysis by City of Wildwood/Lochmueller Group

Director of Public Works Brown introduced Dustin Riechmann of Lochmueller Group, who was retained to determine the outcomes of the Pond-Grover Loop Road (PGL) being extended. Director of Planning and Parks Vujnich noted that staff recognizes the study was delivered late, but there will be no action this evening, and both Departments thought the presentation is necessary for a basic level of understanding and a more in-depth discussion could be held at the June meeting. Both Directors noted the document is still a draft.

Dustin Riechmann, of Lochmueller Group, provided a presentation on the traffic study. He began with an overview of his experience and the purpose of the study, which is to forecast the likely use of Pond-Grover Loop Road, if its connection is provided between its current terminus at Green Pines Drive and the Villages at Bright Leaf Subdivision (VBL), as well as to assess traffic diversions and impacts. He then reviewed the data collection that was completed, as part of the study, noting the following: robust set of data, with traffic counts at seven (7) locations, daily traffic counts at six (6) locations, origin-destination study using license plate tracking at eight (8) locations, and pedestrian observations. Mr. Riechmann then reviewed the study area's roadways and intersections. He noted the study, which was completed in conjunction with the Villages at Bright Leaf rezoning process, focused on that development's impacts, and the data provided only included daily traffic counts. This study is more comprehensive and most of its traffic counts, with the exception of Westglen Farms Drive, were fairly comparable. Origin-destination pair methodology was completed using license plates to identify how drivers are using the streets now. He then outlined the expected traffic diversions, which accounted for a small amount (two (2) to five (5) cars within peak times) of use of these streets to avoid State Route 109 and State Route 100. He then noted the biggest diversion would be from Green Pines Drive. He then showed several slides illustrating the projected daily traffic diversions, if the road is extended, and where traffic is expected to lessen due to the new option. The expectation, if extended, is for an average of two (2) to four (4) vehicles per minute on the Pond-Grover Loop Road. The roadway would be an Urban Minor Collector (UMC), with low-end volume. In Lochmueller's opinion, the roadway will function more as a 'residential collector' than an urban minor collector, even though the Federal Highway Administration (FHWA) classification is UMC. He then reviewed design recommendations for if the road is connected, including one (1) driving lane in each direction, with traffic calming measures, and the integratation of multi-modal options. Pedestiran activity was reviewed and a calming treatment would be necessary, with extra precautions at Green Pines Drive, with either a roundabout or a two-stage crossing.

Discussion was then held among the Committee Members and included the following: the background provided to the engineer about the road, including the VBL plans, the history of the roadway, and the platted road location; if Professional Engineers were in the field during the traffic study – yes, three (3); the standard timeframe of traffic studies and if one (1) day is typical – yes, can get an accurate assessment in that timeframe, plus had VBL counts that were at a different time; the weather during the day of the study (wind chill and cold in morning, but sunny, with 20 minutes of rain in afternoon, but nice after for several hours) – the consultant returned on another day, with better weather, for additional pedestrian study and nothing made them suspect study data was inaccurate; the question if Exhibit 6 numbers included VBL – yes, and report includes narrative without VBL; do the numbers on PGL include traffic from State Route 109 – yes, but there won't be much volume from State Route 109 to use it as a cut-through, given travel time is twice as long to cut through streets vs. staying on main roadways; Mr. Riechmann's professional opinion that PGL will not be used as a cut through from State Routes 109 to 100 and vice-versa, if design includes traffic calming measures; the top advantages for extending PGL – 1. Reduction in traffic on other neighborhood streets that are not designed as neighborhood collectors, by providing multiple points of access. 2. Only one (1) signalized access point to State Route 100, with no other options along this limited-access roadway, so making the connection to serve the larger neighborhood, not just VBL.; top negatives to extending PGL – 1. Introducing traffic to an area that currently has none. No other drawbacks from a traffic perspective.; the definition of a cut-through route - using a road outside of its intended purpose to avoid other available routes; the timing of certain routes, such as traveling Westglen Farms Drive to State Route 109, via State Route 100, takes four (4) minutes and six (6)

minutes, if Forest Leaf Parkway is used; if after consideration of the multiple studies is there anything that is missing that would be helpful – no, cannot see a more comprehensive way to calculate traffic in this area and determine diversions; would the stoplight at Taylor Road and State Route 100 be adjusted for different times of day – north side of intersection would be lighter volume than coming out of Town Center, so light could be adjusted, but that would be completed by the Missouri Department of Transportation.; the scenario of changes to the Evergreen Subdivision – the proposed configuration would not incentivize people to go west to PGL and then go east on State Route 100. This traffic would likely use an alternate route, probably their current route.; the additional observations of pedestrians done around school dismissal. Nothing that seemed unsafe during those studies, as mentioned, care needs to be taken at the intersection of PGL and Green Pines Drive.; the difficulty in quantifying pedestrian flow, since people's feelings of safety can't be considered; and Exhibit 6 representing the net summary of changes in traffic patterns. Trip changes were taken into account, so diversions were calculated for parents coming and leaving Green Pines Elementary School.

IV. Public Comments

Steve Casper, 2502 Forest Leaf Parkway, thanked Dustin and noted there has been a large increase in traffic on his street, since he moved in. He then stated his belief the traffic study shows a decrease in traffic, if the road goes through, and it should be extended for the safety of local children.

Susan Treiber, 15912 Sandalwood Creek Drive, noted her opinion the traffic study is flawed because she didn't see any counting devices or cameras, only clipboards and cones, and the traffic count devices don't count the number of pedestrians; the weather was cold and the traffic counters were in their cars and not paying attention; and when she went by the school there were no pedestrians.

Christine Walker, 16616 Green Pines Drive, states she understands the study shows that traffic will be reduced on Green Pines Drive, but what would happen if road is not extended?

Dave Bertolino, 16712 Hickory Crest Drive, thinks the study ignores Sandalwood Creek Drive and asked if people on Sandalwood Creek Drive would use VBL roads, even without the extension of PGL? He also questioned that, if the road is not completed, would the two (2) proposed access points be sufficient to handle the volume of traffic from VBL?

Betsy Vanderheyden, 16560 Birch Forest Drive, believes what is missing is the number of residents who would be negatively impacted by road construction. Requested show of hands (twelve (12)) people in attendance stated they would be negatively impacted by the construction.

Debra Smith McCutchen, 16548 Birch Forest Drive, stated she thought there were three (3) entry points into VBL. She commented that a number of traffic studies take traffic counts and turning movements on separate days and questioned why this approach wasn't taken with the PGL study. She then posed the following additional questions regarding the traffic study: why the levels of service were not included in the study; why all of the roads included in the perspective were not used; what analysis tools were used; what method was used to collect counts; what is a destination route; what types of trips were included in the study; what has been the accuracy rate of past traffic studies by Lochmueller Group; why other studies show street connectivity increases trips, but this study says different; why Thunderhead Canyon

was excluded from the study area; and why the report implied that local residents wouldn't use the street they live on.

Gary Schroeder, 16642 Evergreen Forest Drive, asked the following questions regarding the traffic study: On page 3, in the third (3rd) paragraph, is this statement implying that people would increase their visits to the Town Center Area, if PGL is extended; On page 4, in the bottom paragraph, states there were not pedestrian issues in this location, but a traffic calming device was added on Forest Leaf Parkway, so there must be an issue. He also stated his concerns that, if there are two (2) to four (4) cars per minute on the new PGL, it will be difficult for pedestrians to cross the street and, if Forest Leaf Parkway and other roads in the area are considered Urban Minor Collectors, they should be fine without the road because their counts are low for a UMC.

Denny Welker, 16903 Westridge Oaks Drive, stated he is a Professional Engineer and familiar with these types of studies. He noted his support of the methodology used, and has no problems with this study. He stated his hope was the City is not debating if PGL should be extended, since it has been in the Master Plan since 1996 and is in current Master Plan. He doesn't understand why a government agency with 20+ years of planning around a connection with too much traffic going through a residential area, where it wasn't intended, wouldn't carry forward with the plan, which is logical and has been in place for so long.

Dennis Handley, 2525 Rain Forest Drive, stated he has been looking at Exhibit 6 that shows a reduction of four hundred (400) trips, but doesn't understand how that is possible, since the road extension would add 2600 cars to bottom of that area that will dump traffic into those neighborhoods. He noted he was opposed to the 1990 study done by St. Louis County, which planned the road, and he has concerns with the volume of traffic that would be added if the road is extended. He also noted the proposed road location is too close to a property owner's swingset.

Jane Finnegan, 2517 Rain Forest Drive, will back to new road and has questions on how many new families in VBL are expected to attend Green Pines Elementary, Lafayette High School, etc., and were those numbers considered in the traffic study? She asked why it wasn't included in the study that Lafayette High School students will exit at Clayton Road and State Route 109 and use the PGL extension to go to Dierbergs. She noted she has been opposed to the road for a very long time and believes it does not need to go through, but her neighborhood doesn't have money for attorneys to prevent this road from being installed, unlike the Lafayette Trails Subdivision. She also requested a noise and light study from the impacts of this road on existing residents in the area. Finally, she noted that kids won't walk to school in the rain and they won't be able to ride their bicycles to neighbors, if the road is constructed.

Shirley Roberts, 16016 Sandalwood Creek Drive, noted she is located in the southeast corner of the Sandalwood Creek Subdivision and the road will remove all of the trees behind her home. The road will be nice, but it's not okay because it will be behind her house. She noted that it is great to relieve traffic on other roads and understands why those people support it, but she is not in favor of the road extension and thinks it is unnecessary. She also noted that Westridge Oaks Drive will not be effected by this decision and that resident should not have been at this meeting, nor had a comment.

John Gragnani, 1510 Scofield Valley Lane, noted he is not affected by road, but why was City founded? Wasn't it due to prevent intrusions from things they don't want? Would any of us buy a home that backs to this road?

Ray Manton, Council Member Ward 2, submitted a written set of questions, which have been attached to these minutes and made a part of the record.

Responses to questions posed during public comment were provided by Mr. Riechmann, as follows:

- Relative to the methodology used in the study – counters can be in cars during study and need to stay safe and unobtrusive to traffic flow; there were eleven (11) people in the field counting; and he has no concerns with the methodology used. The traffic counter machine does include pedestrian counters, all people are trained and it is not a difficult exercise. All methodology used acceptable engineering practices.
- Traffic forecast, if PGL does not get extended, would be maintaining the status quo, but there would be an increase in traffic because of VBL.
- Capacity of VBL was contemplated as part of CBB Traffic Study.
- The proposed access points for VBL would be sufficient, if PGL is not extended.
- Road construction impacts were not considered as part of the traffic study.
- Several factors to why the traffic counters were in the field for only one (1) day: variabilities for location, but within a neighborhood the traffic patterns are typical; had historical data from VBL study; did additional pedestrian study on second day; more cost efficient; and had traffic counts completed by the City in addition to the field work undertaken on the one (1) day. He believes the amount of data collected was statistically relevant.
- Levels of service are necessary in a traffic impact study (like VBL study), but this study was about who would use the roadway vs. other roadways. The levels of service could be calculated, but likely every intersection within the neighborhood is at a level of A or B for capacity, but context is irrelevant for this type of study.
- Daily counts and technology used. City provided twenty-four (24) hour counts that Lochmueller Group utilized. The City uses radar, which is more recent technology than the cables on the road. Two (2) separate units were used and counted six (6) locations over a total of twenty-four (24) hour counts for a week. That data was provided in advance of the 1-day count.
- Several trips relative to mixed use or commercial uses, such as pass-by trips and common trips, which are not applicable in this type of area, were not used in the study.
- Accuracy rate on past studies are generally completed on new development for traffic impact studies and easily calculated. Lochmueller Group doesn't normally do post-follow up studies, given they are not funded by the hiring firm. The best measure is agencies who are repeat customers, which they get often.
- He believes a reasonable study area was used to examine issue, and Thunderhead Canyon is outside of the directly applicable area.
- The traffic study was not stating that new trips would be generated by this road extension, but that some drivers heading to the Town Center Area, from north of State Route 100, may use PGL.
- The street design in the neighborhoods is what led to traffic calming measures, not pedestrian issues.
- The neighborhood streets in this area are considered local, not collectors, because of their design and direct driveway access. This situation is very different from the classification of PGL, which has no direct driveway access.
- The PGL connection is not critical to VBL.
- Connection would decrease traffic counts in front of Green Pines Elementary School.
- Numbers on PGL reflect VBL. Without VBL road construction would anticipate 1000 trips per day on PGL. VBL adds another three hundred sixty plus (360+) trips a day.

- The traffic intersection at State Route 100, was not part of traffic study. The timing of the light cycle at the interchange is established by Missouri Department of Transportation.
- VBL trips to all schools are accounted for in the traffic study.
- Sound and light studies area not part of this traffic study.
- On the day the field work was conducted, as part of this traffic study, there was light rain for a brief period of time, and thunderstorms in the region, but not in Wildwood. Additional traffic counts had already been completed. The amount of rain that day would not have impacted people's routes, but would have effected pedestrians, which is why they did additional pedestrian analysis on another day.
- The methodology used in the license plates analysis was to record the last three (3) digits of as many cars as possible at every point. Then the data was entered into a spreadsheet, where a macro was used to calculate the information and additional manual calculation was also utilized, as well. It is easy to pick up license plates in a neighborhood scenario with 4-way stops.

Other comments from Committee:

- PGL has been identified since original Master Plan in 1996.
- Residents of the Sandalwood Creek Subdivision are concerned with the difficulty in accessing State Route 109 now and that this circumstance may increase when additional homes are added in VBL, if no alternate route is provided.
- The calculation of trip reduction on the adjacent neighborhood streets shows a reduction in trips between 9% and 36%, with an average reduction of 19%. Is that an alleviation and an accurate benefit? Mr. Riechmann noted that a 9% to 36% change would be noticeable and significant for the people on those streets.
- Is there a national average on accident counts versus areas with direct access vs. not?

V. Next Meeting Date of the Committee – Tuesday, June 28, 2016 at 7:00 p.m.

Next meeting will address answers to questions posed this evening. Have explanations of sale information chart, green space map, and information on street extensions/non-extensions.

VI. Closing Remarks/Adjournment

A motion was made by Council Member Marshall, seconded by Committee Member Pohlers, to adjourn the meeting. A voice vote was taken, with no opposition, whereupon Chair Baugus declared the motion approved and the meeting adjourned at 9:10 p.m.

KATHY

Questions submitted by Ray Manton

Wildwood ward 2 council member

17700 Birch Leaf Ct. 63005

1. WOULD THE TRANSPORTATION ENVIRONMENT IN THE STUDY AREA BE IMPROVED OR ENHANCED WITH THE COMPLETION OF THE PGL AND BIRCH FOREST DRIVE CONNECTIONS?
2. WOULD THE EXTENSION OF THE PGL AND BIRCH FOREST DRIVE CONNECTIONS IMPROVE OR ENHANCE TRAFFIC FLOW IN THE STUDY AREA?
3. WOULD THE EFFECTIVNESS AND EFFICIENCY OF FIRST RESPONDERS IN THE STUDY AREA BE INCREASED WITH THE EXTENSIONS?
4. WOULD THE SAFETY OF SCHOOL CHILDREN IN THE STUDY AREA BE ENHANCED?
5. REGARDING PUBLIC SAFETY, IS THERE ANY REASON THAT THE PGL AND BIRCH FOREST DRIVE CONNECTIONS SHOULD NOT BE COMPLETED?

June 25, 2016

Mr. Rick C. Brown, PE, PTOE
Director of Public Works / City Engineer
City of Wildwood
16860 Main Street
Wildwood, MO 63040

RE: Pond-Grover Loop Road Traffic Study

Dear Mr. Brown:

As requested, Lochmueller Group has completed a traffic study evaluating neighborhood traffic flows for the possible completion of Pond-Grover Loop Road in Wildwood, Missouri. The connection of Pond-Grover from Route 109 to Route 100 (opposite Taylor Road) has been planned for some time, and a current residential development proposal known as Brightleaf may be required to construct a portion of the roadway while adding to area traffic. A City committee is currently considering whether to complete the final connection between Green Pines Road and the northern extent of Brightleaf subdivision.

The purpose of this study was to evaluate the traffic impacts associated with the completion of Pond-Grover Loop Road on the primary roadways within the adjoining neighborhoods. The study addressed conditions during the a.m. and p.m. peak periods as well as the total traffic flows over the course of a typical weekday. The study area, primary roadways, and the seven study intersections are shown in **Exhibit 1**.

Existing Conditions

In order to evaluate traffic flows throughout the study area, seven intersections were evaluated. As part of the Brightleaf traffic study (completed in July 2015 by CBB) turning movement counts were collected at three of the current study intersections, during the morning (7:00 to 9:00 a.m.) and afternoon (4:00 to 6:00 p.m.) peak periods. From those counts, it was determined that the peak hours of traffic occur from 7:15 to 8:15 in the morning and from 4:45 to 5:45 in the afternoon.

Using these peak hours, turning movement counts were then collected at the remaining four study area intersections. The seven study area intersections are listed below:

1. Pond-Grover Loop Road at Hickory Manor Drive
2. Pond-Grover Loop Road at Green Pines Drive
3. Forest Leaf Parkway at Fullerton Meadows Drive
4. Forest Leaf Parkway at Green Pines Drive
5. Westglen Farms Drive at Fullerton Meadows Drive
6. Westglen Farms Drive at Green Pines Drive
7. Westglen Farms Drive at Forest Leaf Parkway

The existing peak hour traffic volumes are illustrated in **Exhibit 2**.

In addition to peak hour turning movement counts, the City collected weekly traffic counts at six mid-block locations. These counts were used to determine the Average Daily Traffic (ADT) for the study roadways, as summarized in **Exhibit 3**.

411 North 10th Street, Suite 200
St. Louis, Missouri 63101
PHONE: 314.621.3395

As shown, daily traffic on the study roadways typically ranges from 1,100 to 1,700 vehicles per day (vpd). The only exception is Westglen Farms to the south of Fullerton Meadows where a combination of several feeder roadways and adjacent commercial development increase traffic to approximately 4,150 vpd.

In addition to the vehicular counts, pedestrian volumes were documented at each study intersection and observations were conducted adjacent to Green Pines Elementary School during arrival and dismissal periods. In general, pedestrian flows were light and no meaningful issues or concerns were documented near the elementary school.

Finally, in order to quantify the travel patterns through the study area, an origin-destination study was completed. License plate information was collected throughout the neighborhood during the morning (7:00 to 9:00 a.m.) and afternoon (3:30 to 5:30 p.m.) peak periods at the eight locations shown in **Exhibit 4**.

The license plate data was then matched up to determine where each vehicle began and/or ended their trip. This provided detailed information about existing travel patterns within and through the entire study area, which allowed for a reliable prediction of traffic diversions if Pond-Grover Loop Road is extended to Route 100.

Traffic Diversions with Completion of Pond-Grover Loop Road

In order to forecast the volume of traffic that would use Pond-Grover Loop Road if it is completed, the origin-destination information and traffic counts were analyzed. It was determined that traffic from several of the origin-destination pairs would be likely to divert, in part, to Pond-Grover if it is extended.

The routes are displayed in **Exhibit 5**. These pairs include routes between locations 1, 2, 3 or 4 and locations 6, 7 or 8. Location 4 was collected to ensure that any traffic traveling between Hickory Crest Drive and locations 6, 7 or 8 could be identified separately from those traveling further to the west.

It should be noted that very little cut-through traffic (through trips between Route 100 and 109) was documented during the origin-destination study. The relative travel time of traversing the lower-speed and more circuitous local streets versus using the Route 100/109 interchange provides little incentive to cut through the neighborhood. The extension of Pond-Grover Loop Road would <u>not</u> be expected to induce a significant volume of cut-through traffic, as travel speeds and the addition of a roundabout on the roadway within the Brightleaf subdivision would also result in slower travel paths as compared to using the interchange.

From the origin-destination data, it was determined that approximately 25 to 35 percent of the traffic currently using Green Pines Drive between Pond-Grover Loop Road and Forest Leaf Parkway would be diverted to the Pond-Grover Loop Road extension due to the shorter travel time that it would provide. This amounts to 25 to 40 trips in each direction during the morning and afternoon peak hours.

Additionally, a portion of the traffic from Hickory Manor Drive and Paradise Peak Circle which currently travels travels to/from Route 109 would be expected to divert to the Pond-Grover Loop Road extension to travel east on Route 100. In total, this would represent 15 to 20 trips during the morning and afternoon peak hour.

Based on the existing ADT counts, the directional distribution of traffic on Pond-Grover Loop Road is unbalanced with a greater volume of traffic headed westbound than eastbound over the course a day. This is likely due to the Eatherton Road intersection's ¾ access which restricts left turns onto Route 109.

Specifically, residents destined for Sandalwood Creek Drive can enter the area from either direction on Route 109 but cannot use Eatherton Road to travel south on Route 109 without first heading north to the roundabout at Pond-Grover Loop Road and making a U-turn. Consequently, some motorists are traveling north and accessing Pond-Grover Loop Road via Hickory Crest Drive then heading west to Route 109. It is expected that approximately 10 vehicles per hour would divert from this route to the Pond-Grover Loop Road extension to head directly south to Route 100.

In addition to these quantifiable traffic flows that already exist within the neighborhood, it is anticipated that some additional trips would use the Pond-Grover Loop extension for local shopping activities. In particular, the introduction of a signalized access opposite Taylor Road would likely attract some shopping trips destined to the Town Center that currently use other routes. It is estimated that approximately 20 peak hour trips would be added from these diversions.

In total, diversions from existing traffic within the area would be expected to add 90-115 peak period trips to the extension of Pond-Grover Loop Road. Based on existing hourly flows throughout the day, this would represent approximately 1,000 vehicles per day.

In addition to existing traffic diversions, traffic from the proposed Brightleaf subdivision would also use the new connection. The trip generation and directional distribution estimates in the traffic study for the Brightleaf subdivision were reviewed and it was determined that these estimates were reasonable. It is expected that approximately 20% of the proposed subdivision's traffic would use the Pond-Grover Loop Road extension to travel to/from the north on Route 109. This amounts to 20 to 30 vehicles using Pond-Grover Loop Road during the morning and afternoon peak hours to the south of Green Pines Drive, or approximately 360 vehicles per day.

To the north of Route 100, traffic generated by Brightleaf would be significantly higher. It is estimated that the new subdivision would add 110 to 140 vehicles per peak hour to the section of Pond-Grover Loop Road immediately north of Route 100, or approximately 1,620 vehicles per day.

In summary, based on *daily traffic estimates*, the following volumes would be expected to use Pond-Grover Loop Road if it is completed between Green Pines Drive and Route 100. The primary traffic diversions that would use the new roadway are shown graphically in **Exhibit 6**.

- 500 vpd diverted from Green Pines Drive
- 200 vpd diverted from trips currently heading west from Hickory Manor and Paradise Peak to instead head east on Pond-Grover towards Route 100
- 100 vpd diverted from Hickory Crest Drive heading west to instead head east on Pond-Grover towards Route 100
- 200 vpd diverted from Town Center trips
- 360 vpd from Brightleaf south of Green Pines and 1,620 vpd north of Route 100

In total, **the projected ADT utilizing Pond-Grover Loop Road upon its completion (and build-out of Brightleaf subdivision) would be approximately 1,360 vpd south of Green Pines Drive and 2,620 north of Route 100**. During peak periods, this amounts to approximately 140 and 260 vehicles per hour using Pond-Grover Loop Road south of Green Pines Drive and north of Route 100, respectively, or an average of 2-4 vehicles per minute.

Emergency Service Considerations

In order to assess the potential roadway connection's impact on emergency services, the Fire Marshall for Metro West Fire Protection District was consulted. Based on Metro West's analysis, the extension of the Pond-Grover Loop Road would save approximately 83 seconds in a response to Hickory Valley Court and Hickory Crest. **This could save nearly three minutes in total transport time to a hospital.**

According to the Fire Marshall, three minutes could be the difference between life and death in life-threatening situations, and in the case of a stroke it could be the difference between a full recovery and permanent disabilities. In addition, the road would give emergency service providers a secondary means of ingress and egress to the area.

Functional Classification & Recommended Design of Pond-Grover Loop Road

The Federal Highway Administration (FHWA) has published information regarding roadway functional classification concepts, criteria and procedures. This information outlines distinction between different functional classification categories. East-West Gateway uses these guidelines to determine functional classifications for the roadways in the Saint Louis region. In the study area, most roads are classified as local roads with West Glen Farms classified as a Major Collector, Route 109 as a Minor Arterial, and Route 100 as a Principal Arterial.

Urban Minor Collectors serve both land access and traffic circulation in lower density residential and commercial/industrial areas and help distribute trips between local roads and arterials. Typical ADT volumes on Urban Minor Collectors range from 1,100 to 6,300 vehicles.

Local Roads make up the majority of roadways accounting for approximately 70 percent of total roadway mileage over an entire regional system. Local Roads provide direct access to land, provide access to higher-level roadways and typically do not carry significant through traffic. Local Roads typically have ADT volumes of 80 to 700 vehicles.

Based on both the ADT estimates and the types of trips expected to utilize Pond-Grover Loop Road, it would likely function as a **residential Urban Minor Collector**. However, it would be at the low end of a collector street from a traffic volume perspective.

It is recommended that the roadway be designed with one lane in each direction and include traffic calming measures. The second phase of this study will evaluate the roadway design and consider approporiate traffic calming measures in detail.

The roundabout and cross-section with a landscaped median proposed for the section of the roadway within Brightleaf will also serve to calm traffic, resulting in slower speeds and less propensity to attract

any cut-through traffic. It it anticipated that these and other treatments will be considered along both the existing and new sections of Pond-Grover Loop Road as the study process moves forward.

It is our understanding that pedestrian crossings of Pond-Grover Loop Road, if extended, are a concern, particularly as it relates to interaction with Green Pines Elementary and crossings at the intersection with Green Pines Drive. Based on the projected volumes, traffic activity on Pond-Grover Loop Road in this area will be similar to current traffic on Green Pines Drive, Forest Leaf Parkway and Fullerton Meadows Drive. It will be important to properly design the intersection of Pond-Grover Loop Road and Green Pines Drive to safely accommodate pedestrian crossings in all directions. The introduction of a landscaped median and/or a potential roundabout would facilitate two-stage pedestrian crossings, which would greatly enhance pedestrian safety.

Finally, it is our understanding that a park is under development on the west side of Route 109 and will connect to Pond-Grover Loop Road. While some neighborhood residents would use Pond-Grover (with or without its full extension) to access the park, the completion of the roadway would not be expected to attract regional traffic destined to the park. As noted previously, the use of the Route 100/109 interchange would remain a substantially quicker path for those trips, and the park's completion would not be expected to significantly alter the traffic volumes using Pond-Grover Loop Road south of Green Pines Drive.

We trust that you will find this traffic study useful in evaluating the prudence of extending Pond-Grover Loop Road between Green Pines Drive and Brightleaf subdivision. Please do not hesitate to contact our office with any questions you may have regarding this material.

Sincerely,

Lochmueller Group, Inc.

Dustin B. Riechmann

Dustin B. Riechmann, PE, PTOE
Traffic Engineering Manager

CITY OF WILDWOOD, MISSOURI

POND-GROVER LOOP STUDY

General Area Map

EXHIBIT 1: STUDY AREA ROADWAYS AND INTERSECTIONS

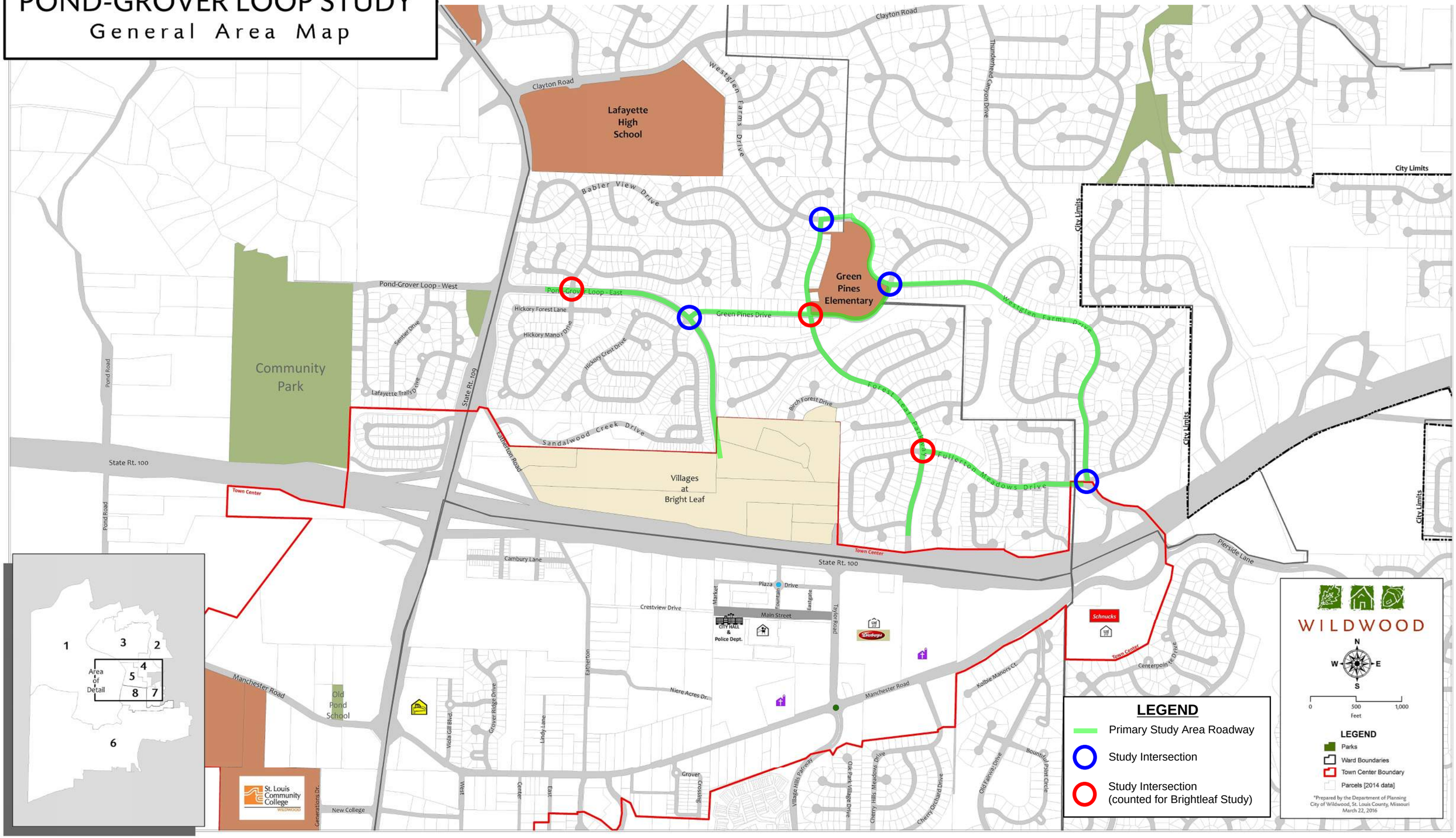

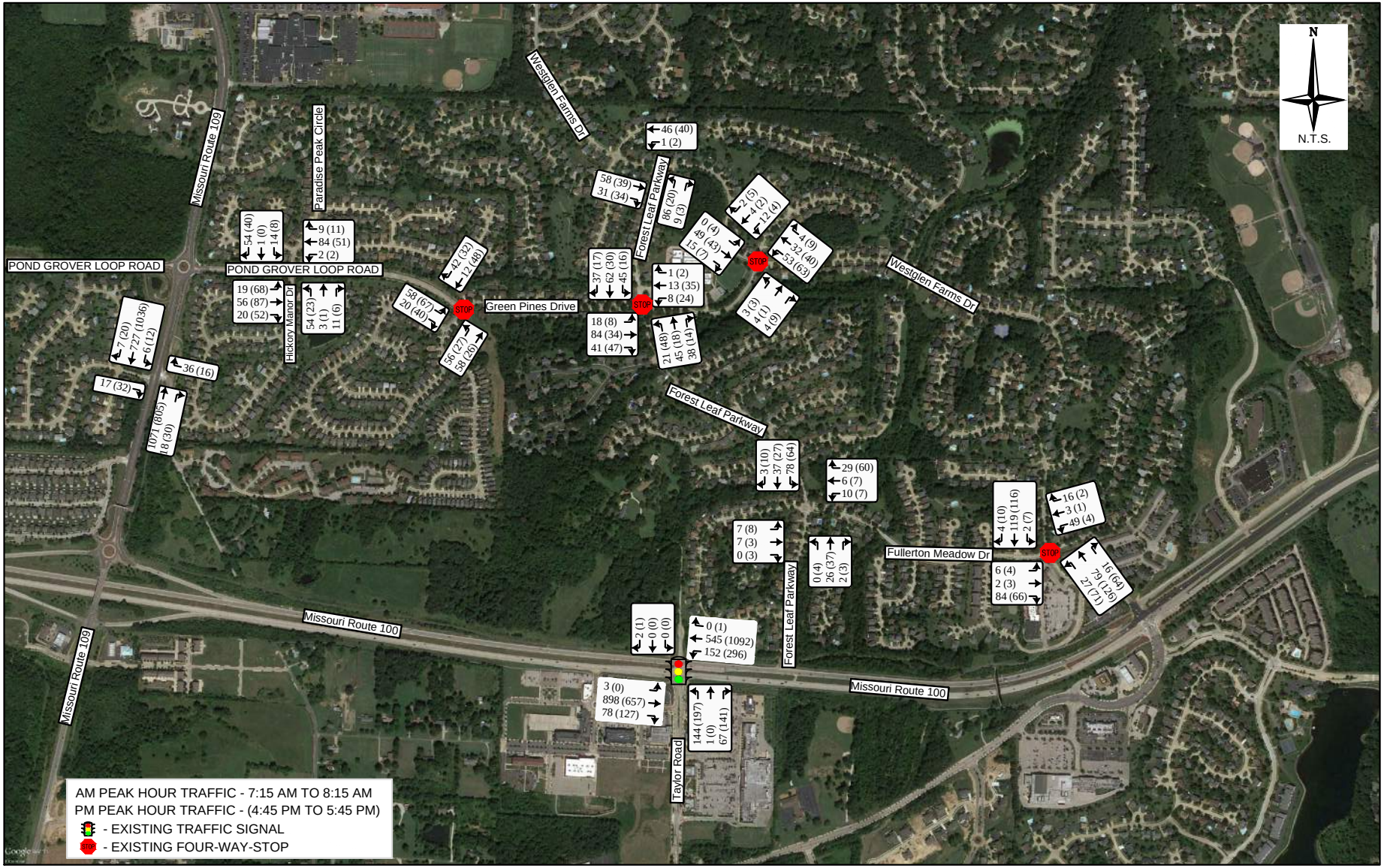

LOCHMUELLER GROUP
411 North 10th Street, Suite 200
St. Louis, Missouri 63101
PHONE: 314.621.3395

EXHIBIT 2: EXISTING PEAK HOUR TRAFFIC

POND GROVER LOOP ROAD
WILDWOOD, MISSOURI
515-0145-OTE

CITY OF WILDWOOD, MISSOURI

POND-GROVER LOOP STUDY

General Area Map

EXHIBIT 3: AVERAGE DAILY TRAFFIC (ADT) ON PRIMARY ROADWAYS

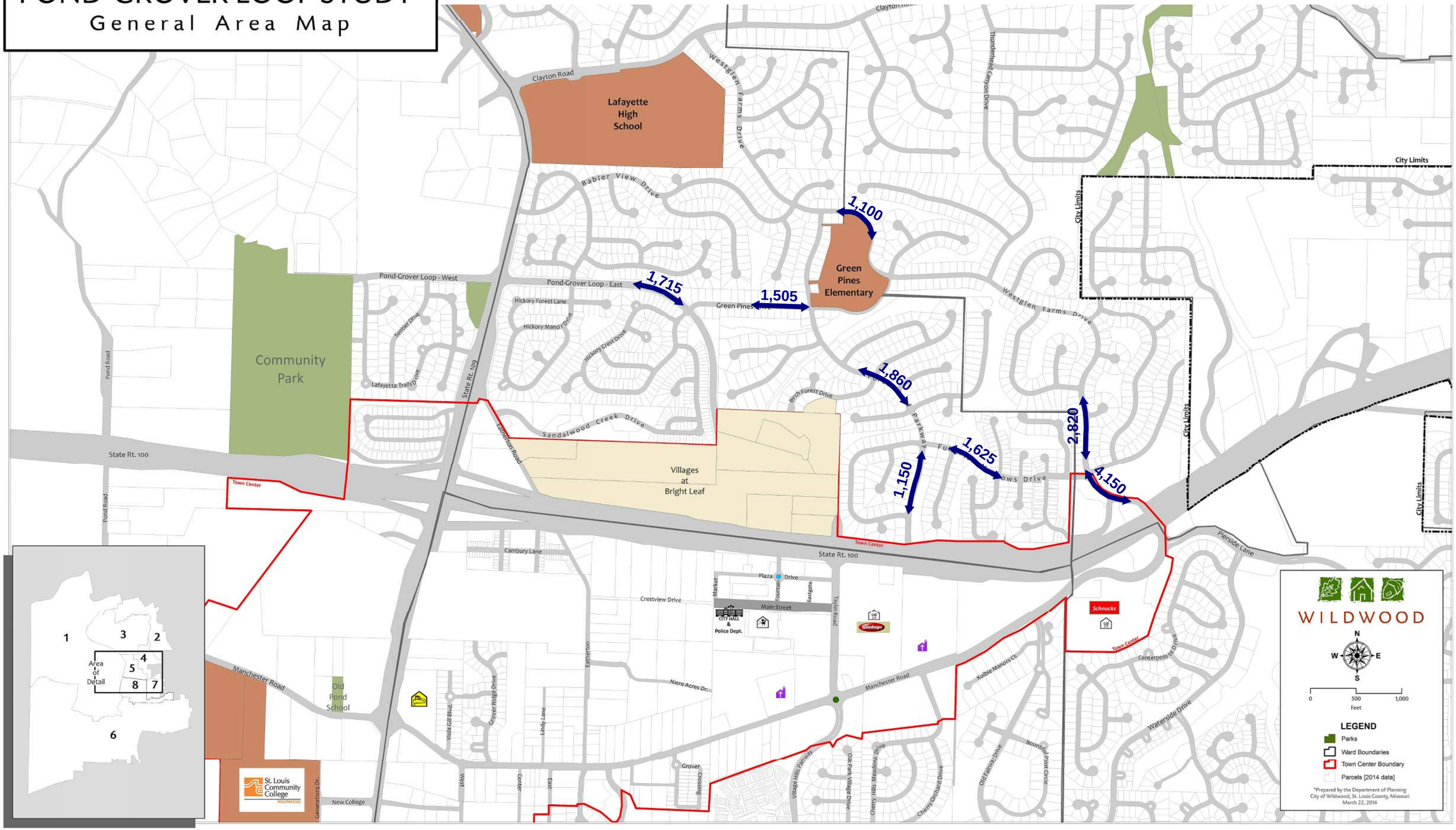

CITY OF WILDWOOD, MISSOURI

POND-GROVER LOOP STUDY

General Area Map

EXHIBIT 4: ORIGIN-DESTINATION LOCATIONS

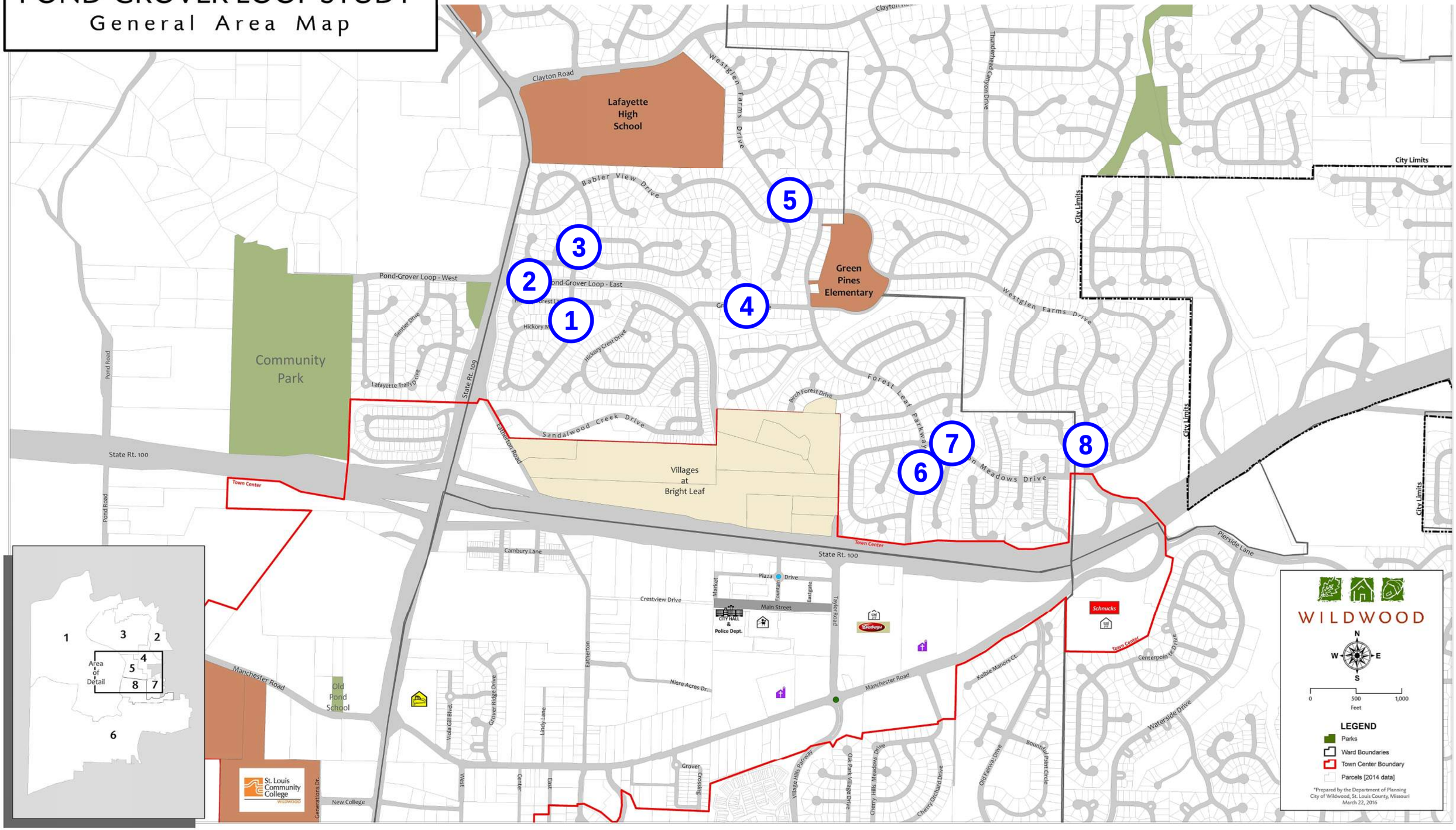

CITY OF WILDWOOD, MISSOURI

POND-GROVER LOOP STUDY

General Area Map

EXHIBIT 5: KEY TRAVEL ROUTES BETWEEN ORIGIN-DESTINATION PAIRS

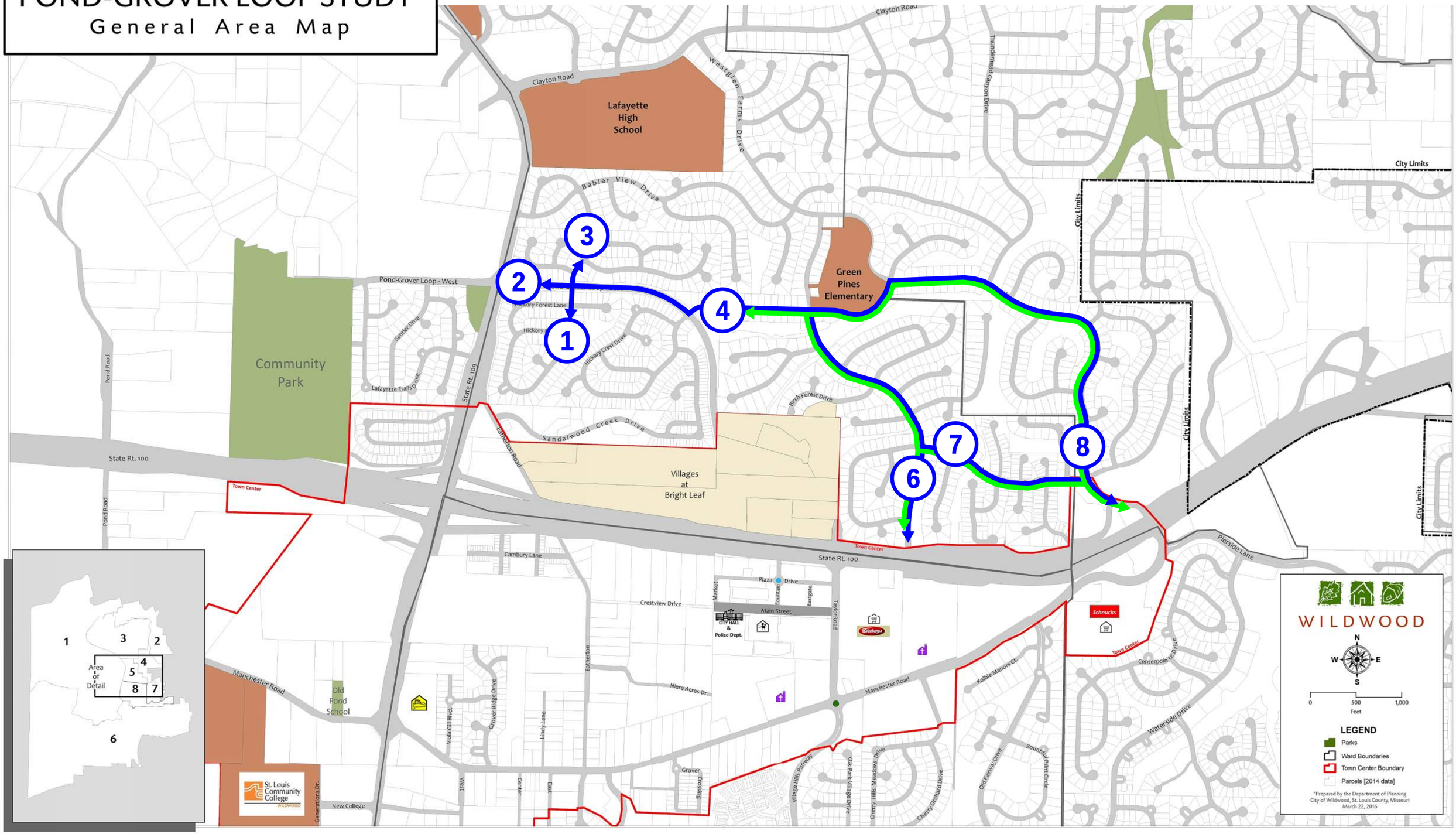

CITY OF WILDWOOD, MISSOURI

POND-GROVER LOOP STUDY

General Area Map

EXHIBIT 6: PROJECTED DAILY TRAFFIC WITH POND-GROVER EXTENSION

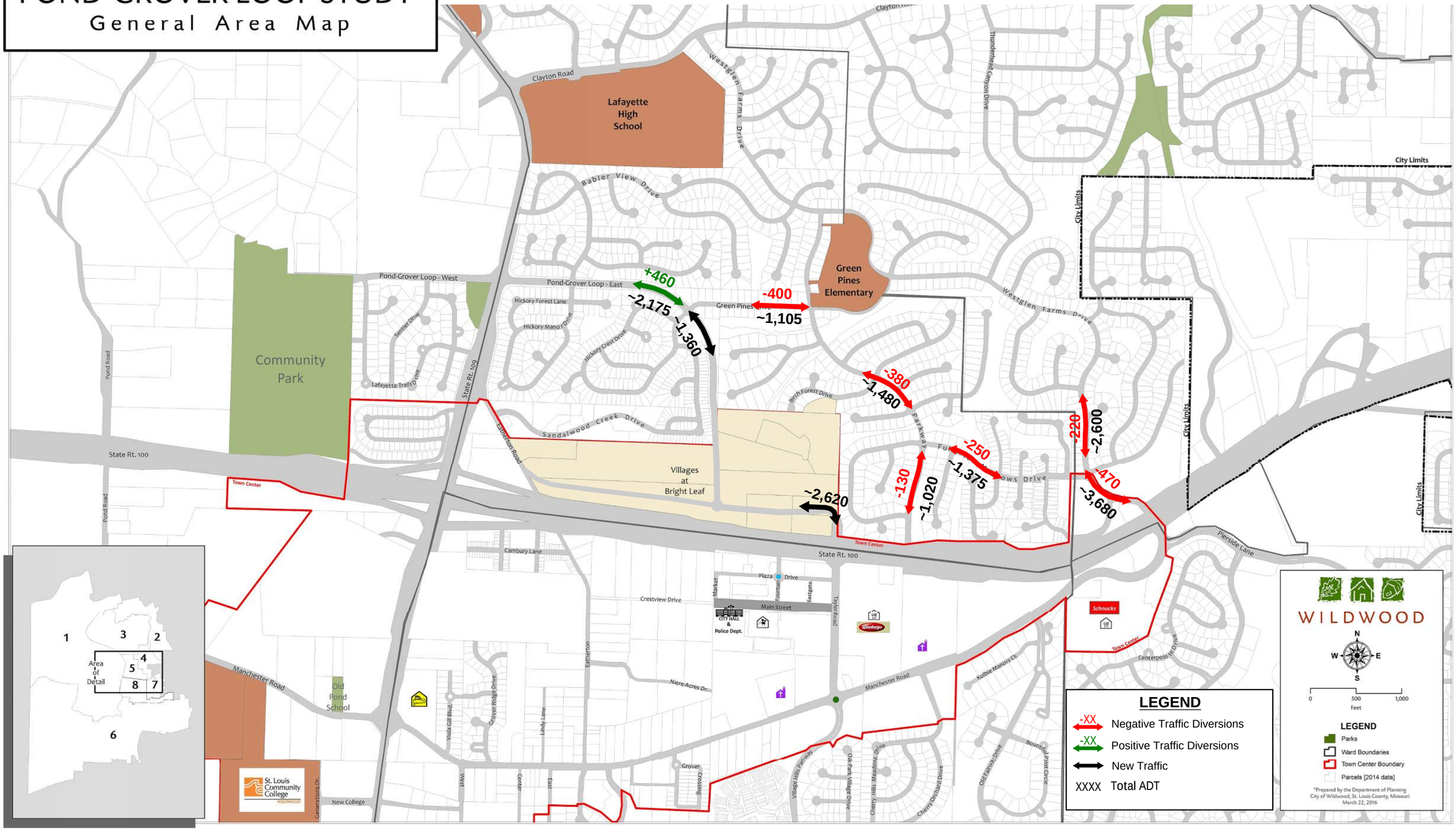

100 0 100 200
GRAPHIC SCALE IN FEET

CITY OF WILDWOOD, MISSOURI
POND-GROVER LOOP ROAD

CONCEPT PLAN

LOCHMUELLER GROUP
411 North 10th Street, Suite 200
St. Louis, Missouri 63101
PHONE: 314.621.3395

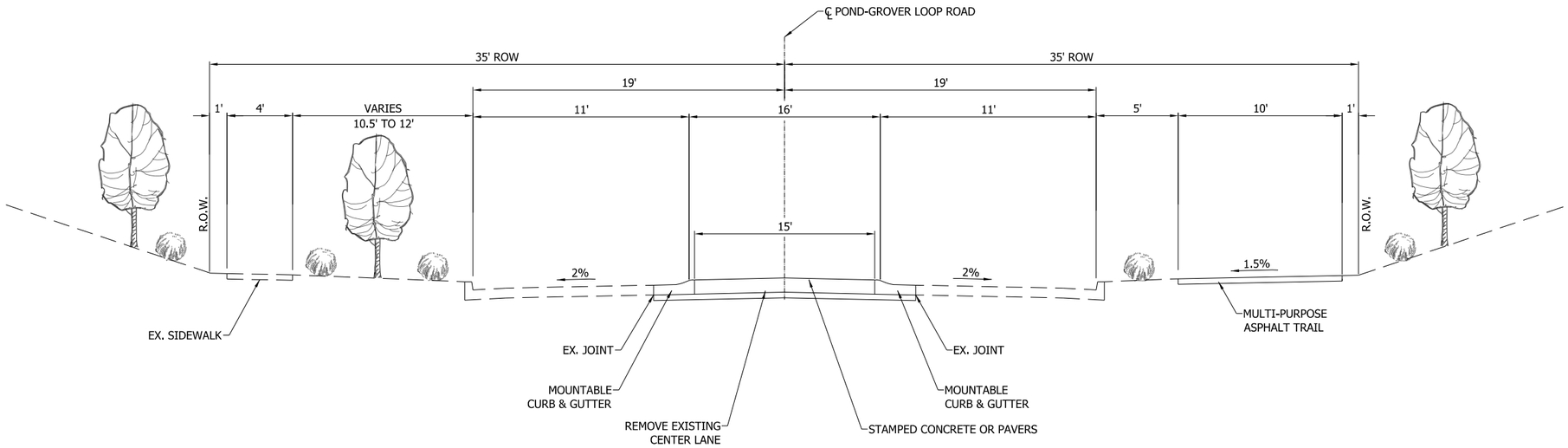

1B TYPICAL SECTION - EXISTING ROADWAY CONVERSION - PAVED MEDIAN
POND-GROVER LOOP ROAD
ROUTE 109 TO GREEN PINES DRIVE

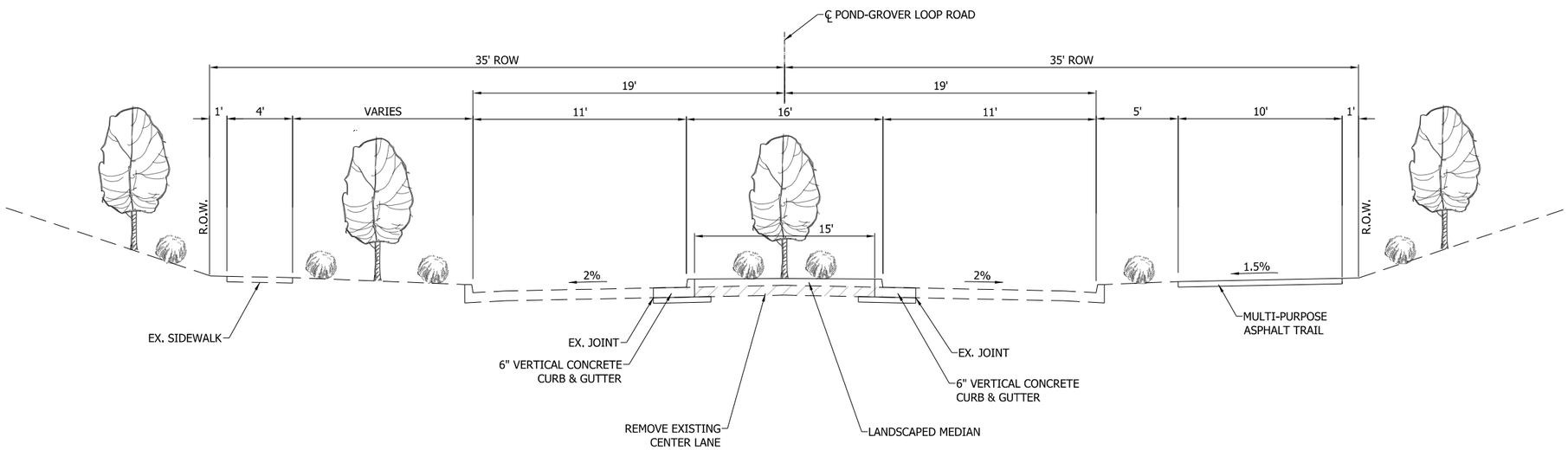

1A TYPICAL SECTION - EXISTING ROADWAY CONVERSION - LANDSCAPED MEDIAN
POND-GROVER LOOP ROAD
ROUTE 109 TO GREEN PINES DRIVE

NOT TO SCALE	CITY OF WILDWOOD, MISSOURI POND-GROVER LOOP ROAD	LOCHMUELLER GROUP 411 North 10th Street, Suite 200 St. Louis, Missouri 63101 PHONE: 314.621.3395
	TYPICAL SECTIONS 1 OF 4	

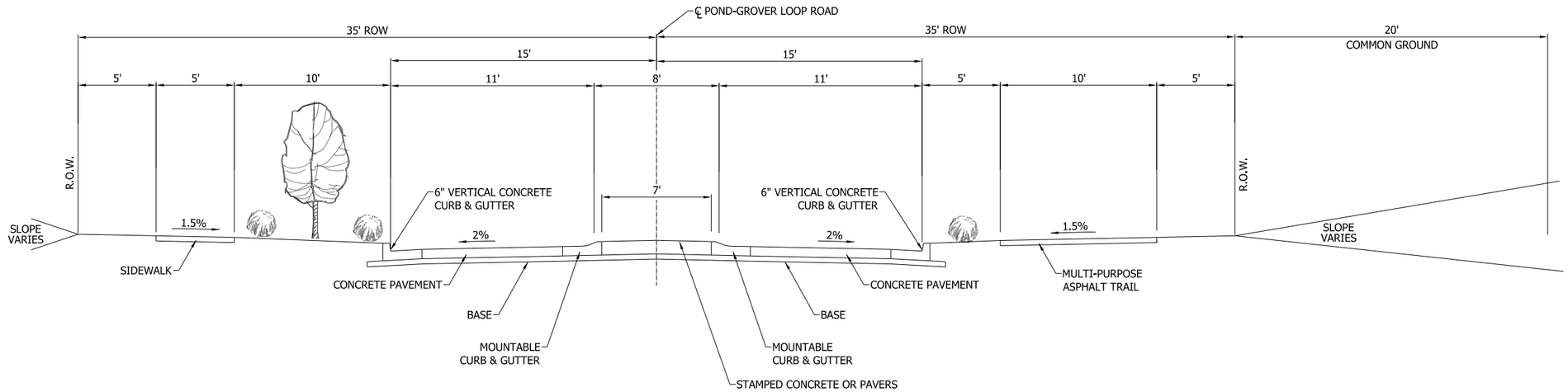

2B TYPICAL SECTION - PROPOSED EXTENSION - PAVED MEDIAN
POND-GROVER LOOP ROAD
GREEN PINES DRIVE TO BRIGHTLEAF DEVELOPMENT

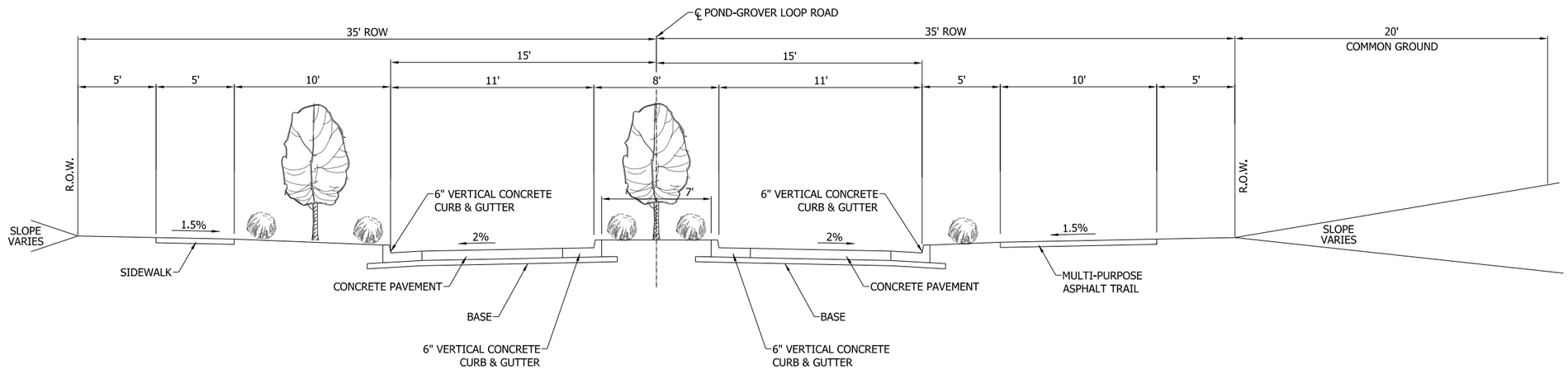

2A TYPICAL SECTION - PROPOSED EXTENSION - LANDSCAPED MEDIAN
POND-GROVER LOOP ROAD
GREEN PINES DRIVE TO BRIGHTLEAF DEVELOPMENT

NOT TO SCALE	CITY OF WILDWOOD, MISSOURI POND-GROVER LOOP ROAD	LOCHMUELLER GROUP 411 North 10th Street, Suite 200 St. Louis, Missouri 63101 PHONE: 314.621.3395
	TYPICAL SECTIONS 2 OF 4	

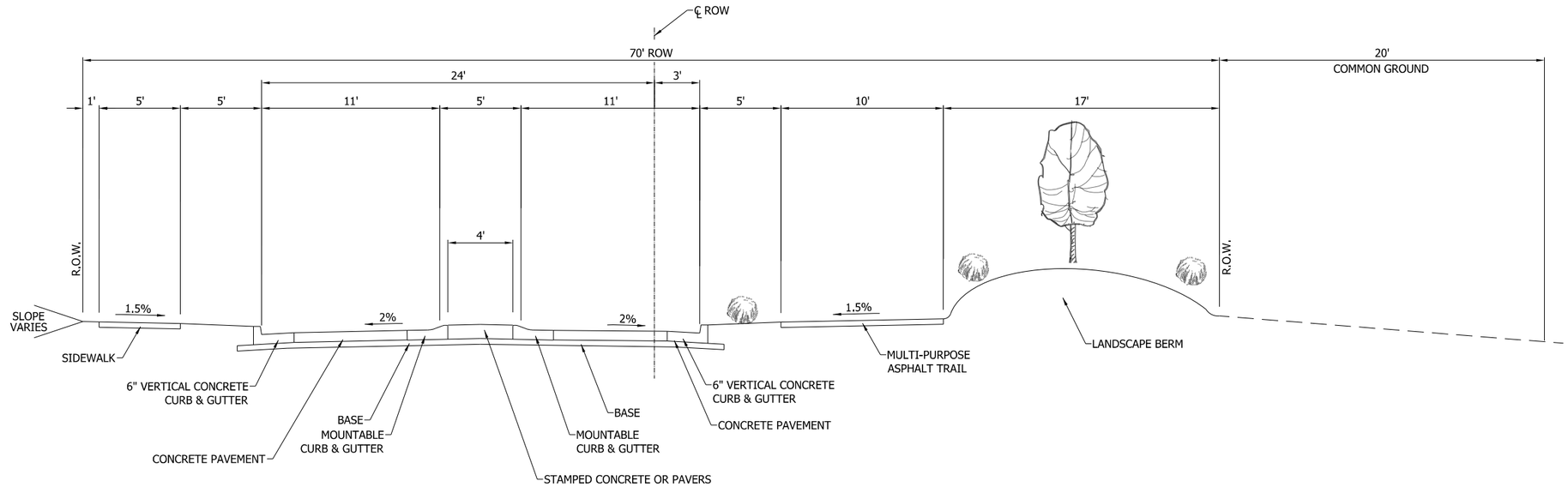

3B TYPICAL SECTION - PROPOSED EXTENSION - NARROW PAVED MEDIAN
POND-GROVER LOOP ROAD
GREEN PINES DRIVE TO BRIGHTLEAF DEVELOPMENT

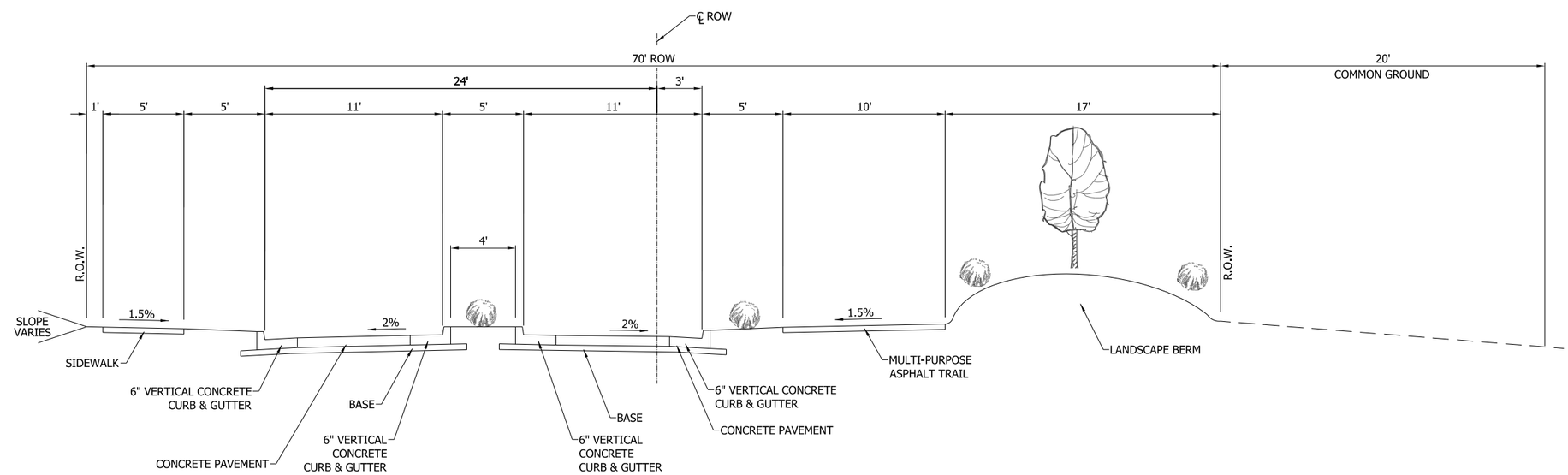

3A TYPICAL SECTION - PROPOSED EXTENSION - NARROW LANDSCAPED MEDIAN
POND-GROVER LOOP ROAD
GREEN PINES DRIVE TO BRIGHTLEAF DEVELOPMENT

NOT TO SCALE	CITY OF WILDWOOD, MISSOURI POND-GROVER LOOP ROAD	LOCHMUELLER GROUP 411 North 10th Street, Suite 200 St. Louis, Missouri 63101 PHONE: 314.621.3395
	TYPICAL SECTIONS 3 OF 4	

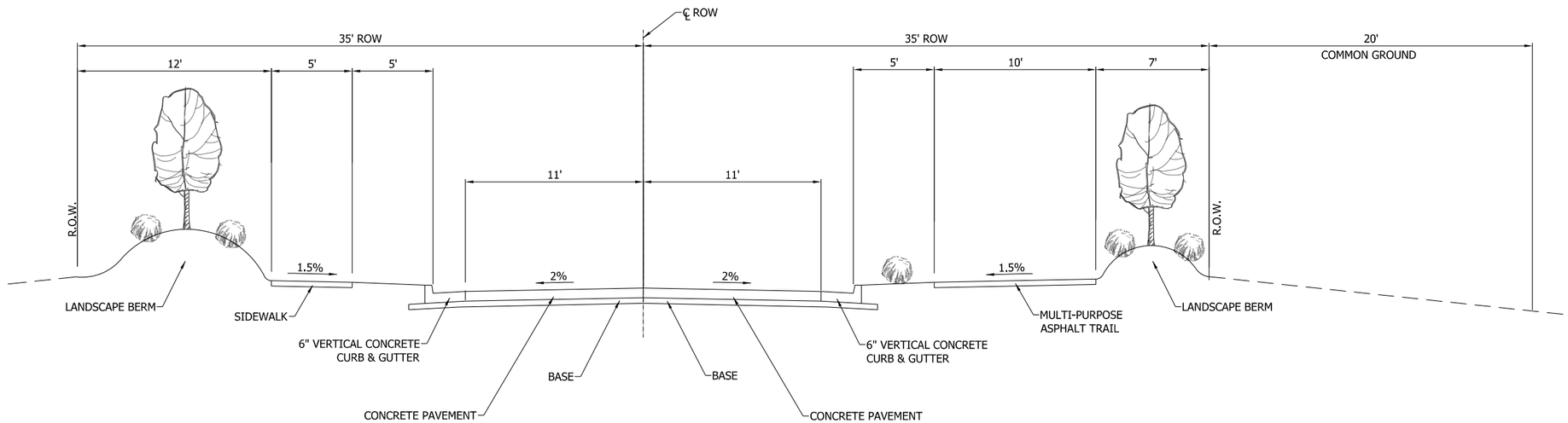

4 TYPICAL SECTION - PROPOSED EXTENSION - NO MEDIAN
POND-GROVER LOOP ROAD
GREEN PINES DRIVE TO BRIGHT LEAF DEVELOPMENT

NOT TO SCALE	CITY OF WILDWOOD, MISSOURI POND-GROVER LOOP ROAD	LOCHMUELLER GROUP 411 North 10th Street, Suite 200 St. Louis, Missouri 63101 PHONE: 314.621.3395
	TYPICAL SECTIONS 4 OF 4	

WILDWOOD

June 28, 2016

MEMORANDUM

To: Pond-Grover Loop Road Committee Members

From: Department of Planning and Parks

Re: **Stub Streets or Access Not Extended/Restricted Between Residential Subdivisions in the City of Wildwood**

Cc: Ryan S. Thomas, P.E., City Administrator
John A. Young, City Attorney
Rick Brown, P.E. and P.T.O.E., Director of Public Works
Kathy Arnett, Assistant Director of Planning and Parks

The Department of Planning was questioned regarding the number of residential subdivisions that currently have not been required to extend existing stub streets or, conversely, where a through street was blocked to restrict access. In reviewing this inquiry, the Department has determined the following in this regard:

1. **Wynncrest Subdivision** – two (2) existing stub streets from Valley View Subdivision and Brentmoor Place Subdivision were not extended - Clayton Road, east of Strecker Road. (Ward – Two)
2. **Turnberry Place Subdivision** – Vehicular access closed on Turnberry Place Drive – Strecker Road, south of Clayton Road. (Ward – Two)
3. **Villages of Bright Leaf Subdivision** – Birch Forest Drive – Proposed new street not to be extended into the Evergreen Subdivision. (Ward – Five)
4. **Homestead Estates** – Proposed extension of Sara Mathews Lane from Three Sisters Farm Subdivision to the Estates at Homestead Subdivision limited to pedestrian and bicycle only, not vehicular - Rieger Road, west of Pond Road. (Ward – One)

If any of the members should have questions or comments in this regard, please feel free to contact the Department of Planning at (636) 458-0440. Thank you for your consideration of such and input on the same.

WILDWOOD

June 28, 2016

MEMORANDUM

To: Pond-Grover Loop Road Committee Members

From: Department of Planning and Parks

Re: **Provision of Secondary Emergency Access to Residential Subdivisions in the City of Wildwood**

Cc: Ryan S. Thomas, P.E., City Administrator
John A. Young, City Attorney
Rick Brown, P.E. and P.T.O.E., Director of Public Works
Kathy Arnett, Assistant Director of Planning and Parks

The Department of Planning was questioned regarding the number of residential subdivisions that currently have been required to provide secondary, emergency access to them by one (1) of the three (3) fire districts that serve the City of Wildwood. In reviewing past subdivision activity, where such emergency access would have been required, the Department determined the following in this regard:

1. **Monarch Fire Protection District (north third of the City):**

    a. Wills Trace – Kehrs Mill Road and Joe's Way
    b. Wildhorse – Wild Horse Creek Road and Orrville Road
    c. The Highlands at Wildhorse - Wild Horse Creek Road and Church Road
    d. Shepard Oaks -Shepard Road

2. **Metro West Fire Protection District (middle third of the City)**

    a. Birch Forest Drive

3. **Eureka Fire Protection District (southern third of the City):** None

The Department would note these secondary emergency access points are gated and do not allow general traffic, as part of their respective use. Although gated, some do allow pedestrian access by their design.

If any of the members should have questions or comments in this regard, please feel free to contact the Department of Planning at (636) 458-0440. Thank you for your consideration of such and input on the same.

WILDWOOD

POND-GROVER LOOP ROAD COMMITTEE

Information on Home Sales Price in vicinity of Pond-Grover Loop Road

June 28, 2016

MEMORANDUM

To: Pond-Grover Loop Raod Committee Members

From: Department of Planning and Parks

Re: Information on Sale Price of Homes within the Vicinity of the Pond-Grover Loop Road

Cc: Ryan S. Thomas, P.E., City Administrator
John A. Young, City Attorney
Rick Brown, P.E. and P.T.O.E., Director of Public Works

Throughout the past year, as discussions have been held regarding the future of the Pond-Grover Loop Road, and its possible extension, questions have been raised about property values and the impact its construction would have on them in its vicinity. In analyzing this matter, the Department gathered details on the sale prices of homes in subdivisions that back to the existing Pond-Grover Loop Road in an effort to determine if they show significantly lower sales prices, as has been questioned. The data used is from St. Louis County Department of Revenue and reflects a 3-year timeframe of sales between 2012 and 2014.

The analysis does not take into account details on the home type or condition, but simply its proximity to the roadway and sale price. The data was extrapolated by subdivision, for the six (6) locations adjacent to the Pond-Grover Loop Road. These subdivisions included the following:

- Lafayette Trails
- Kingstowne Estates
- Hickory Manor – Village A
- Hickory Manor – Village B
- Hickory Manor – Village C & D
- Hunters Run & Evergreen

This data shows property that is adjacent to the Pond-Grover Loop Road is mixed, sometimes the highest priced home within the subdivision and sometimes the lowest priced home. These statistics, shown on the attached spreadsheets, likely reflect the condition and style of the home have a greater impact on its price,

than if it is adjacent to the Pond-Grover Loop Road. Proximity to roadways remains a major consideration in the design of any residential subdivision within the City and how to best manage safety, light, sound, and views to the benefit of the residences next to them. Accordingly, this consideration led to the need to provide a conceptual design of the roadway, so its components can be visualized and understood from an inclusion/use standpoint.

Home Sale Prices - Lafayette Trails Subdivision
2012-2014

# on Map	House Number	Street Name	Subdivision	Through Street/ Cul-de-sac	Location within subdivision	Perimeter/ Interior Lot Location	Surrounding Elements	Sale Price	Sale Date	Rank by Pricing (Highest to Lowest)
3	17212	Lafayette Trails Drive	Lafayette Trails	Through	Northwest Quadrant	Perimeter	Backs to Community Park	$ 399,900	7/31/2013	1
14	17108	Lafayette Trails Court	Lafayette Trails	Cul-de-sac	Southeast Quadrant	Perimeter	Backs to Windsor Crest Subdivision	$ 399,900	5/13/2013	1
10	2263	Sentier Drive	Lafayette Trails	Through	Southeast Quadrant	Interior	Surrounded by other lots	$ 385,000	3/30/2014	3
4	17205	Lafayette Trails Drive	Lafayette Trails	Through	Northwest Quadrant	Interior	Surrounded by other lots	$ 355,500	9/24/2012	4
7	17127	Lafayette Trails Drive	Lafayette Trails	Through	Southeast Quadrant	Interior	Surrounded by other lots	$ 355,000	6/13/2012	5
8	2275	Sentier Drive	Lafayette Trails	Through	Southeast Quadrant	Interior	Surrounded by other lots	$ 355,000	5/29/2013	5
17	17218	LeForet Court	Lafayette Trails	Cul-de-sac	Northwest Quadrant	Interior	Surrounded by other lots	$ 350,000	4/16/2013	7
5	17193	Lafayette Trails Drive	Lafayette Trails	Through	Southwest Quadrant	Interior	Surrounded by other lots	$ 343,400	10/2/2012	8
9	2262	Sentier Drive	Lafayette Trails	Through	Southeast Quadrant	Interior	Surrounded by other lots	$ 333,000	7/21/2014	9
12	17114	Sentier Court	Lafayette Trails	Cul-de-sac	Central	Interior	Surrounded by other lots	$ 332,000	1/22/2013	10
1	17220	Lafayette Trails Drive	Lafayette Trails	Through	Northwest Quadrant	Perimeter	Backs to Community Park	$ 330,005	4/25/2012	11
6	17174	Lafayette Trails Drive	Lafayette Trails	Through	Southwest Corner	Perimeter	Borders Community Park and Windsor Crest Subdivision	$ 328,400	4/4/2013	12
2	17225	Lafayette Trails Drive	Lafayette Trails	Through	Northwest Quadrant	Interior	Surrounded by other lots	$ 323,000	5/5/2014	13
15	17117	Lafayette Trails Court	Lafayette Trails	Cul-de-sac	Southeast Quadrant	Perimeter	Backs to State Route 109	$ 323,000	5/29/2014	13
11	2233	Sentier Drive	Lafayette Trails	Through	Northwest Quadrant	Interior	Surrounded by other lots	$ 310,500	8/6/2012	15
13	17161	Lafayette Trails Court	Lafayette Trails	Cul-de-sac	Northeast Corner	Perimeter	Backs to Pond-Grover Loop Road and Retention Basin	$ 245,000	8/28/2012	16
16	17137	Lafayette Trails Court	Lafayette Trails	Cul-de-sac	East-Central	Perimeter	Backs to State Route 109	$ 242,555	3/7/2012	17

Home Sale Prices - Kingstowne Estates Subdivision
2012-2014

# on Map	House Number	Street Name	Subdivision	Through Street/ Cul-de-sac	Location within subdivision	Perimeter/ Interior Lot Location	Surrounding Elements	Sale Price	Sale Date	Rank by Pricing (Highest to Lowest)
32	9	Kingstowne Estates Court	Kingstowne Estates	Cul-de-sac	Southeast Corner	Perimeter	Backs to Hickory Manor Subdivision	$ 300,000	12/4/2014	1
19	16908	Kingstowne Place Drive	Kingstowne Estates	Cul-de-sac	Southwest Quadrant	Perimeter	Backs to Pond-Grover Loop Road	$ 296,000	1/30/2014	2
22	2312	Kingstowne Place Court	Kingstowne Estates	Cul-de-sac	Northwest Quadrant	Interior	Surrounded by other lots	$ 293,000	4/15/2014	3
28	16816	Kingstowne Estates Drive	Kingstowne Estates	Cul-de-sac	South-Central	Perimeter	Backs to Pond-Grover Loop Road	$ 293,000	5/29/2014	3
25	16835	Kingstowne Way Drive	Kingstowne Estates	Through	North-Central	Perimeter	Borders Babler Park Estates Subdivision	$ 283,000	4/25/2013	5
33	2302	Kingstowne Way Court	Kingstowne Estates	Cul-de-sac	Northeast Quadrant	Interior	Surrounded by other lots	$ 276,735	4/3/2012	6
27	16829	Kingstowne Estates Drive	Kingstowne Estates	Cul-de-sac	South-Central	Interior	Surrounded by other lots	$ 276,000	8/27/2013	7
23	2320	Kingstowne Place Court	Kingstowne Estates	Cul-de-sac	Southwest Quadrant	Interior	Corner Lot - interior	$ 273,000	6/2/2013	8
20	16904	Kingstowne Place Drive	Kingstowne Estates	Cul-de-sac	Southwest Quadrant	Perimeter	Backs to Pond-Grover Loop Road	$ 260,500	11/18/2014	9
31	16734	Kingstowne Estates Drive	Kingstowne Estates	Cul-de-sac	Southeast Quadrant	Perimeter	Backs to Hickory Manor Subdivision	$ 259,900	4/29/2012	10
24	2327	Paradise Peak Circle	Kingstowne Estates	Through	Northwest Quadrant	Perimeter	Borders Babler Park Estates Subdivision	$ 258,000	3/4/2014	11
26	16826	Kingstowne Way Drive	Kingstowne Estates	Through	North-Central	Interior	Surrounded by other lots	$ 258,000	5/29/2014	11
34	2303	Kingstowne Way Court	Kingstowne Estates	Cul-de-sac	Northeast Quadrant	Interior	Surrounded by other lots	$ 257,900	5/31/2012	13
30	16750	Kingstowne Estates Drive	Kingstowne Estates	Cul-de-sac	Southeast Quadrant	Perimeter	Backs to Pond-Grover Loop Road	$ 254,500	4/11/2013	14
21	2313	Kingstowne Place Court	Kingstowne Estates	Cul-de-sac	Northwest Quadrant	Interior	Surrounded by other lots	$ 252,000	4/18/2013	15
18	16920	Kingstowne Place Drive	Kingstowne Estates	Cul-de-sac	Southwest Quadrant	Perimeter	Backs to Pond-Grover Loop Road	$ 244,500	1/2/2014	16
29	16758	Kingstowne Estates Drive	Kingstowne Estates	Cul-de-sac	Southeast Quadrant	Perimeter	Backs to Pond-Grover Loop Road	$ 175,000	2/15/2012	17

Home Sale Prices - Hickory Manor Subdivision - Village A
2012-2014

# on Map	House Number	Street Name	Subdivision	Through Street/ Cul-de-sac	Location within subdivision	Perimeter/ Interior Lot Location	Surrounding Elements	Sale Price	Sale Date	Rank by Pricing (Highest to Lowest)
42	2461	Hickory Manor Drive	Hickory Manor Village A	Through	Northwest Quadrant	Perimeter	Backs to State Route 109	$ 272,500	5/20/2014	1
55	2571	Hickory Manor Drive	Hickory Manor Village A	Through	Southwest Quadrant	Interior	Surrounded by other lots	$ 270,000	3/16/2014	2
41	2445	Hickory Manor Drive	Hickory Manor Village A	Through	Northwest Quadrant	Interior	Surrounded by other lots	$ 269,900	10/13/2013	3
40	16998	Hickory Forest Lane	Hickory Manor Village A	Through	Northwest Quadrant	Interior	Surrounded by other lots	$ 268,500	6/16/2013	4
38	16934	Hickory Forest Lane	Hickory Manor Village A	Through	Northwest Quadrant	Interior	Surrounded by other lots	$ 267,000	11/20/2012	5
44	2472	Hickory Manor Drive	Hickory Manor Village A	Through	Southwest Quadrant	Interior	Surrounded by other lots	$ 267,000	12/9/2014	5
51	2511	Hickory Manor Drive	Hickory Manor Village A	Through	Southwest Corner	Perimeter	Backs to Eatherton Road and Sandalwood Creek Condominiums	$ 265,000	11/18/2013	7
37	16979	Hickory Forest Lane	Hickory Manor Village A	Through	Northwest Corner	Perimeter	Backs to State Route 109	$ 260,000	5/27/2014	8
52	2536	Hickory Manor Drive	Hickory Manor Village A	Through	Southwest Quadrant	Interior	Surrounded by other lots	$ 259,900	3/16/2014	9
45	2476	Hickory Manor Drive	Hickory Manor Village A	Through	Southwest Quadrant	Interior	Surrounded by other lots	$ 259,000	9/9/2013	10
35	16947	Hickory Forest Lane	Hickory Manor Village A	Through	Northwest Quadrant	Perimeter	Backs to Pond-Grover Loop Road	$ 255,000	5/20/2012	11
47	2481	Hickory Manor Drive	Hickory Manor Village A	Through	Southwest Quadrant	Perimeter	Backs to Eatherton Road	$ 253,000	5/31/2012	12
49	2503	Hickory Manor Drive	Hickory Manor Village A	Through	Southwest Corner	Perimeter	Backs to Eatherton Road	$ 253,000	9/2/2014	12
43	2452	Hickory Manor Drive	Hickory Manor Village A	Through	Northwest Quadrant	Interior	Surrounded by other lots	$ 246,500	1/26/2014	14
53	2587	Hickory Manor Drive	Hickory Manor Village A	Through	Southwest Quadrant	Interior	Backs to common ground	$ 246,000	5/12/2013	15
46	2477	Hickory Manor Drive	Hickory Manor Village A	Through	Southwest Quadrant	Perimeter	Backs to Eatherton Road and State Route 109	$ 245,000	7/16/2014	16
54	2551	Hickory Manor Drive	Hickory Manor Village A	Through	Southwest Quadrant	Interior	Surrounded by other lots	$ 238,500	4/30/2012	17
36	16967	Hickory Forest Lane	Hickory Manor Village A	Through	Northwest Corner	Perimeter	Backs to Pond-Grover Loop Road	$ 224,900	7/21/2014	18
50	2507	Hickory Manor Drive	Hickory Manor Village A	Through	Southwest Corner	Perimeter	Backs to Eatherton Road	$ 222,000	12/3/2012	19
48	2485	Hickory Manor Drive	Hickory Manor Village A	Through	Southwest Quadrant	Perimeter	Backs to Eatherton Road	$ 218,219	12/11/2012	20
39	16938	Hickory Forest Lane	Hickory Manor Village A	Through	Northwest Quadrant	Interior	Surrounded by other lots	$ 203,500	11/12/2012	21

Home Sale Prices - Hickory Manor Subdivision - Village B
2012-2014

# on Map	House Number	Street Name	Subdivision	Through Street/ Cul-de-sac	Location within subdivision	Perimeter/ Interior Lot Location	Surrounding Elements	Sale Price	Sale Date	Rank by Pricing (Highest to Lowest)
64	16829	Hickory Crest Drive	Hickory Manor Village B	Through	South-Central	Interior	Surrounded by other lots	$ 272,000	3/13/2014	1
70	16720	Hickory Crest Drive	Hickory Manor Village B	Through	Southeast Quadrant	Interior	Surrounded by other lots	$ 267,500	7/22/2012	2
62	16846	Hickory Crest Drive	Hickory Manor Village B	Through	Central	Interior	Backs to retention basin	$ 265,000	10/27/2013	3
73	32	Hickory Valley Court	Hickory Manor Village B	Cul-de-sac	Northeast Quadrant	Interior	Surrounded by other lots	$ 259,000	6/17/2013	4
59	16931	Hickory Crest Drive	Hickory Manor Village B	Through	Northeast Quadrant	Interior	Surrounded by other lots	$ 255,500	4/10/2014	5
60	16716	Hickory Crest Drive	Hickory Manor Village B	Through	Northeast Quadrant	Interior	Backs to retention basin & Pond-Grover Loop Road	$ 251,000	7/20/2014	6
79	16822	Hickory Trails Lane	Hickory Manor Village B	Through	Southeast Quadrant	Interior	Surrounded by other lots	$ 250,300	1/31/2013	7
56	16940	Hickory Crest Drive	Hickory Manor Village B	Through	Northeast Quadrant	Perimeter	Backs to Pond-Grover Loop Road	$ 250,000	3/9/2014	8
71	16724	Hickory Crest Drive	Hickory Manor Village B	Through	Southeast Quadrant	Interior	Surrounded by other lots	$ 248,400	1/20/2014	9
61	16870	Hickory Crest Drive	Hickory Manor Village B	Through	Northeast Quadrant	Interior	Backs to retention basin	$ 240,000	3/27/2013	10
66	16810	Hickory Crest Drive	Hickory Manor Village B	Through	South-Central	Perimeter	Backs to Sandalwood Creek Subdivision	$ 239,400	3/3/2014	11
72	2	Hickory Valley Court	Hickory Manor Village B	Cul-de-sac	Northeast Quadrant	Interior	Surrounded by other lots	$ 232,000	4/14/2014	12
74	33	Hickory Valley Court	Hickory Manor Village B	Cul-de-sac	Northeast Quadrant	Interior	Surrounded by other lots	$ 228,667	3/21/2012	13
81	16864	Hickory Trails Lane	Hickory Manor Village B	Through	Southeast Quadrant	Interior	Surrounded by other lots	$ 225,500	11/27/2012	14
75	57	Hickory Mound Court	Hickory Manor Village B	Cul-de-sac	Southeast Quadrant	Perimeter	Backs to Sandalwood Creek Subdivision	$ 218,000	5/9/2013	15
57	16928	Hickory Crest Drive	Hickory Manor Village B	Through	Northeast Quadrant	Perimeter	Backs to Pond-Grover Loop Road	$ 216,500	3/3/2014	16
68	16780	Hickory Crest Drive	Hickory Manor Village B	Through	South-Central	Perimeter	Backs to Sandalwood Creek Subdivision	$ 214,900	6/23/2013	17
69	16739	Hickory Crest Drive	Hickory Manor Village B	Through	Southeast Quadrant	Interior	Surrounded by other lots	$ 214,900	8/5/2014	17
58	16908	Hickory Crest Drive	Hickory Manor Village B	Through	Northeast Quadrant	Perimeter	Backs to Pond-Grover Loop Road	$ 210,000	3/4/2012	19
80	16852	Hickory Trails Lane	Hickory Manor Village B	Through	Southeast Quadrant	Interior	Surrounded by other lots	$ 207,500	5/28/2012	20
65	16826	Hickory Crest Drive	Hickory Manor Village B	Through	South-Central	Interior	Corner lot - Surrounded by other lots	$ 190,113	9/15/2014	21
63	16830	Hickory Crest Drive	Hickory Manor Village B	Through	Central	Interior	Surrounded by other lots	$ 183,000	6/18/2012	22
67	16802	Hickory Crest Drive	Hickory Manor Village B	Through	South-Central	Perimeter	Backs to Sandalwood Creek Subdivision	$ 167,000	3/25/2012	23

Home Sale Prices - Hickory Manor Subdivision - Villages C and D
2012-2014

# on Map	House Number	Street Name	Subdivision	Through Street/ Cul-de-sac	Location within subdivision	Perimeter/ Interior Lot Location	Surrounding Elements	Sale Price	Sale Date	Rank by Pricing (Highest to Lowest)
90	16660	Green Pines Drive	Hickory Manor Village D	Through	Northeast Quadrant	Perimeter	Backs to Pond-Grover Loop Road	$ 235,000	5/7/2013	1
89	15971	Sandalwood Creek Drive	Hickory Manor Village C	Through	Southeast Corner	Interior	Surrounded by other lots	$ 233,176	4/3/2012	2
82	15908	Sandalwood Creek Drive	Hickory Manor Village C	Through	Southeast Quadrant	Perimeter	Backs to Pond-Grover Loop Road	$ 195,000	7/27/2014	3
88	15940	Sandalwood Creek Drive	Hickory Manor Village C	Through	Southeast Quadrant	Perimeter	Backs to Pond-Grover Loop Road	$ 195,000	9/14/2014	3
77	16755	Hickory Meadows Court	Hickory Manor Village C	Cul-de-sac	Southeast Quadrant	Perimeter	Backs to other lots and Sandalwood Creek Subdivision	$ 190,000	12/14/2014	5
83	15911	Sandalwood Creek Drive	Hickory Manor Village C	Through	Southeast Quadrant	Interior	Surrounded by other lots	$ 187,900	6/18/2014	6
78	16760	Hickory Meadows Court	Hickory Manor Village C	Cul-de-sac	Southeast Quadrant	Perimeter	Backs to Sandalwood Creek Subdivision	$ 186,000	6/30/2014	7
85	15927	Sandalwood Creek Drive	Hickory Manor Village C	Through	Southeast Quadrant	Interior	Surrounded by other lots	$ 184,000	10/21/2012	8
87	15920	Sandalwood Creek Drive	Hickory Manor Village C	Through	Southeast Quadrant	Perimeter	Backs to Pond-Grover Loop Road	$ 178,500	8/18/2013	9
76	16731	Hickory Meadows Court	Hickory Manor Village C	Cul-de-sac	Southeast Quadrant	Interior	Surrounded by other lots	$ 174,000	9/17/2012	10
84	15923	Sandalwood Creek Drive	Hickory Manor Village C	Through	Southeast Quadrant	Interior	Surrounded by other lots	$ 172,500	7/17/2012	11
86	15931	Sandalwood Creek Drive	Hickory Manor Village C	Through	Southeast Quadrant	Interior	Surrounded by other lots	$ 161,500	2/15/2012	12

Home Sale Prices - Hunters Run and Evergreen Subdivisions
2012-2014

# on Map	House Number	Street Name	Subdivision	Through Street/ Cul-de-sac	Location within subdivision	Perimeter/Interior Lot Location	Surrounding Elements	Sale Price	Sale Date	Rank by Pricing (Highest to Lowest)
91	16648	Green Pines Drive	Evergreen	Through	Northwest Corner	Perimeter	Adjacent to Hickory Manor - backs to common ground	$ 230,000	6/22/2014	1
92	16004	Sandalwood Creek Drive	Hunters Run	Through	East-Central	Perimeter	Backs to Pond-Grover Loop Road	$ 187,959	3/21/2012	2
95	16028	Sandalwood Creek Drive	Hunters Run	Through	Southeast Corner	Perimeter	Backs to Villages at Bright Leaf Proposed Subdivision	$ 173,500	12/3/2014	3
94	2333	Hunters Crest Drive	Hunters Run	Through	Northeast Quadrant	Perimeter	Backs to Hickory Manor Subdivision	$ 170,000	3/14/2013	4
97	16044	Sandalwood Creek Drive	Hunters Run	Through	Southeast Quadrant	Perimeter	Backs to Villages at Bright Leaf Proposed Subdivision	$ 167,000	7/10/2013	5
96	16036	Sandalwood Creek Drive	Hunters Run	Through	Southeast Corner	Perimeter	Backs to Villages at Bright Leaf Proposed Subdivision	$ 165,000	12/3/2012	6
98	16052	Sandalwood Creek Drive	Hunters Run	Through	Southeast Quadrant	Perimeter	Backs to Villages at Bright Leaf Proposed Subdivision	$ 162,000	10/17/2012	7
99	16056	Sandalwood Creek Drive	Hunters Run	Through	Southeast Quadrant	Perimeter	Backs to Villages at Bright Leaf Proposed Subdivision	$ 150,000	10/21/2013	8
93	16016	Sandalwood Creek Drive	Hunters Run	Through	Southeast Corner	Perimeter	Backs to Pond-Grover Loop Road	$ 143,000	10/26/2014	9

WILDWOOD

POND-GROVER LOOP ROAD COMMITTEE

Address:	Dwelling Constructed in:	Other Improvements:	Constructed in:	Purchased by Current Owner:
16700 Hickory Crest Drive	1988	Patio 204sf	1988	2004
15902 Sandalwood Creek Drive	n/a	Retention Basin	1995	n/a
15904 Sandalwood Creek Drive	1995	Patio 144sf	1995	2006
15908 Sandalwood Creek Drive	1995	Patio 144sf	1995	2014
15930 Pond Grover Loop Road	n/a	Common Ground: 20'Wx201'L; 0.32 ac	Platted 1994	n/a
15912 Sandalwood Creek Drive	1996	Deck 214sf	1996	1996
15916 Sandalwood Creek Drive	1996	Patio 200sf	1996	2000
15920 Sandalwood Creek Drive	1995	Deck 174sf	1995	2013
15924 Sandalwood Creek Drive	1996	Deck 192sf	1996	2010
15928 Sandalwood Creek Drive	1996	Patio 144sf	1996	2007/09?
15932 Sandalwood Creek Drive	1995	Patio 150sf	1995	2004/06 [trans?]
15936 Sandalwood Creek Drive	1996	Patio 144sf	1996	1996
15940 Sandalwood Creek Drive	1995	Patio 120sf	1995	2014
15944 Sandalwood Creek Drive	1995	Patio 168sf	1995	2004/10/15?
15948 Sandalwood Creek Drive	1996	n/a	--	2006
15952 Sandalwood Creek Drive	1994	Patio 144sf	1994	2002/09/16?
15956 Sandalwood Creek Drive	1996	n/a	--	1998/99?
15960 Sandalwood Creek Drive	1994	Patio 216sf	1994	1998/2004 [trans?]
15964 Sandalwood Creek Drive	1996	Patio 192sf	1996	2005/12?
15968 Sandalwood Creek Drive	1994	Patio 207sf	1994	2008
15972 Sandalwood Creek Drive	1996	n/a	--	1996/2011?
15976 Sandalwood Creek Drive	1994	Patio 117sf	1994	2011
15980 Sandalwood Creek Drive	1993	Deck 130sf	1993	2004
15984 Sandalwood Creek Drive	1993	Deck 288sf	1993	2003 [trans?]
15988 Sandalwood Creek Drive	1994	Deck 120sf	1994	2006
16000 Sandalwood Creek Drive	1993	n/a	--	1994
16004 Sandalwood Creek Drive	1993	Patio 277sf	1993	2012
16008 Sandalwood Creek Drive	1993	Deck 182sf	1993	2008
16006 Sandalwood Creek Drive	n/a	Common Ground: 20'Wx405'L; 0.19 ac	Platted 1993	n/a
16012 Sandalwood Creek Drive	1993	Patio 156sf	1993	2001/15?
16016 Sandalwood Creek Drive	1993	Patio 100sf	1993	2014/16?
16020 Sandalwood Creek Drive	1993	Deck 120sf	1993	1993
16660 Green Pines Drive	1997	Deck 256sf	1997	2013
16664 Green Pines Drive	n/a	Common Ground: 1.31 ac	Platted 1995	n/a
2407 Forest Leaf Parkway	n/a	Common Ground: 2.77 ac	Platted 1986	n/a
2415 Forest Leaf Parkway	n/a	Common Ground: 1.37 ac	Platted 1988	n/a
2404 Evergreen Forest Court	1987	Deck 1,000sf	2002	2001/13?
2405 Evergreen Forest Court	1987	Deck 405sf	1990	1987
16643 Evergreen Forest Drive	1987	Inground Pool & Patio 500sf; perimeter fence	2014	2008
16646 Evergreen Forest Drive	1987	Patio 256sf	1987	2003
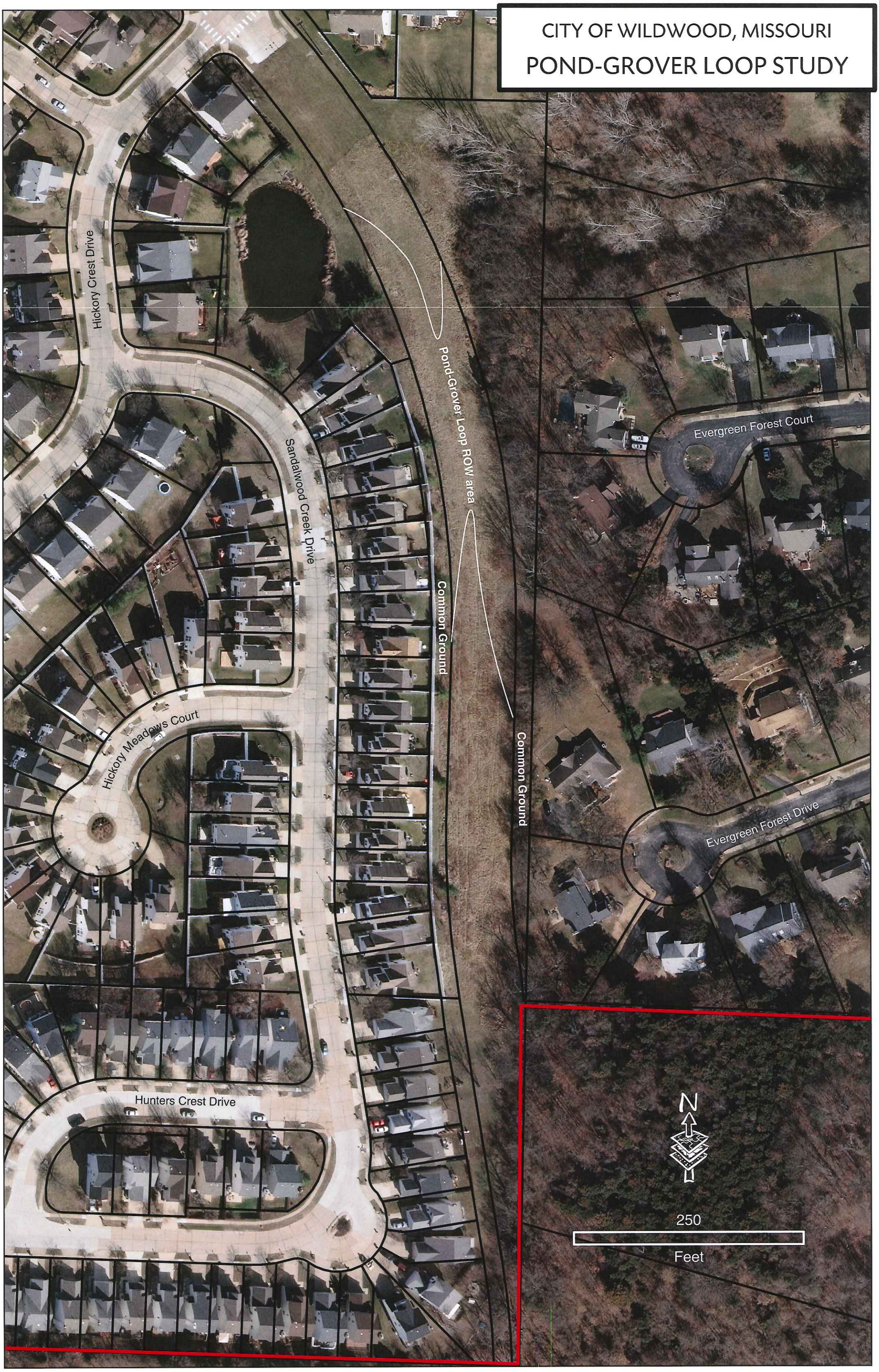
CITY OF WILDWOOD, MISSOURI
POND-GROVER LOOP STUDY